CCTV Straight Upside Structure (2-1)

(Normal Type : 15m)

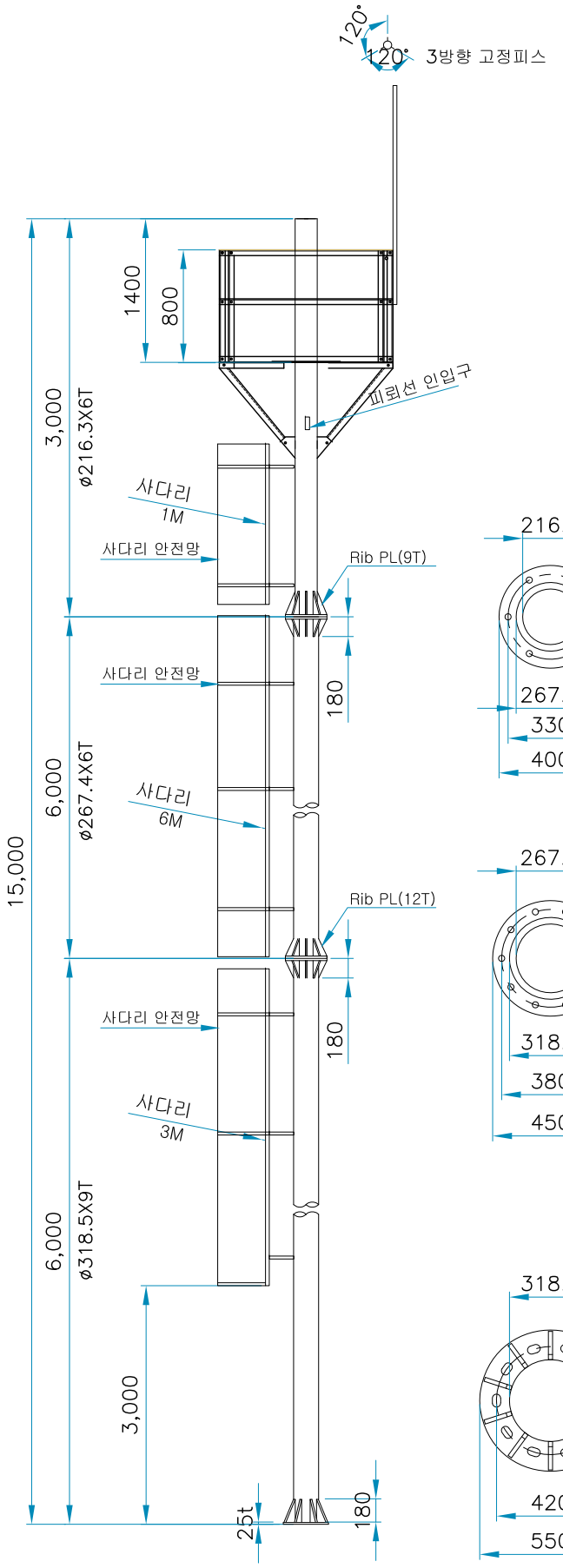

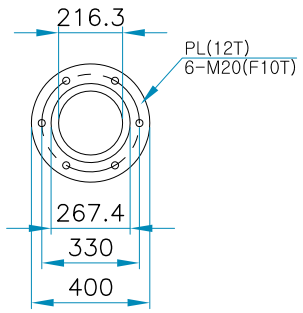

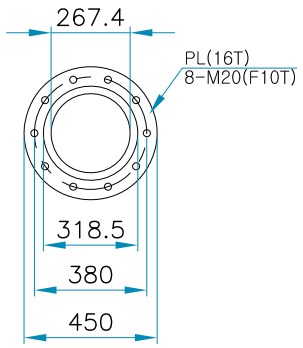

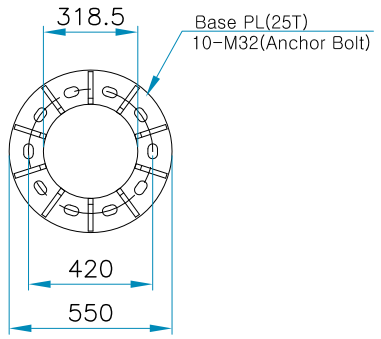

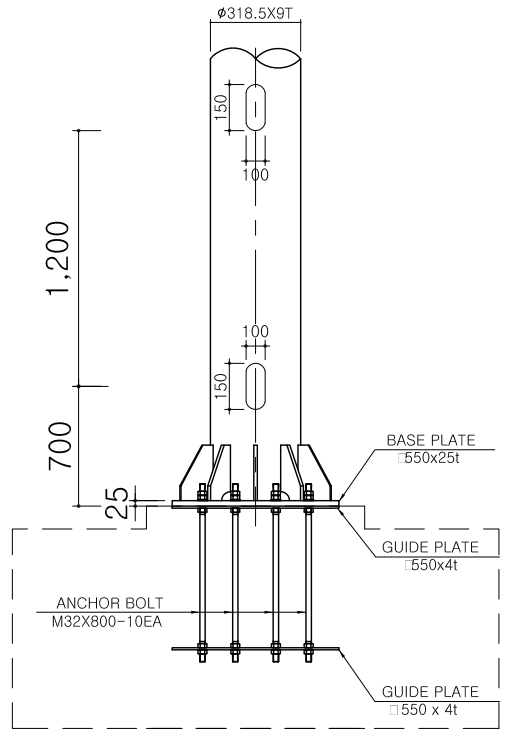

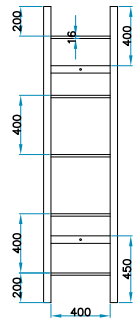

LADDER DETAIL
(BAND HOLD TYPE)

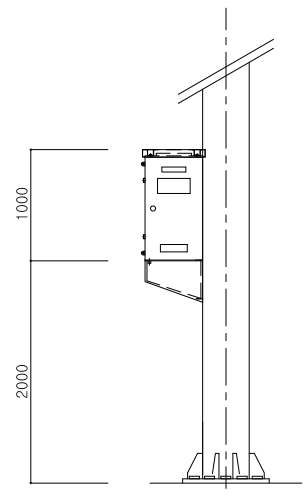

Cross Section A-A

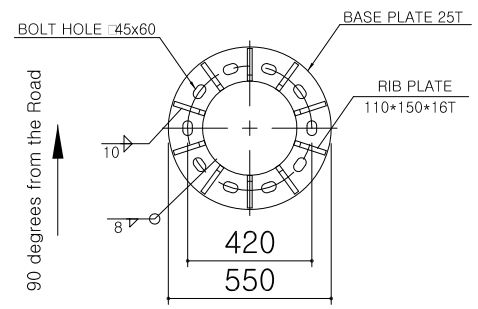

NOTE

1. Implements and instruments should be manufactured to fit to installation site and conditions.
2.All steel pipes must be made of SPS400.
3. For making a weld and joint between tips of steel pipes, it must go all around of pipes and use fillet welding method.
4. Welding point of steel pipe and Rib should be trimmed to clear because it its fatigue strength get decreased easily.
5. All steel materials and bolts take molten and galvanized process.
6. Careful treatment required in moving and positioning instruments to avoid deformation.
7. It basically uses double nuts in jointing ANCHOR BOLT.
   (But, single nut in FLANGE BOLT)
8. Steel pipe branch joint should be welded according to a detailed drawing and meet the necessary throat thickness.

ASUNCION CITYHALL, REPUBLIC OF PARAGUAY KOICA	Project Name	The Establishment of Advanced Traffic Management System(ATMS) in Asuncion, Paraguay						Scale	NONE	Drawings Name	CCTV Straight Upside Structure (2-1)
	Design Construction Company	TRACOM						CAD Name	ASU-CV-001		
			Revisions	Day	Reason	Drawed by	Checked by	Approved by	Sector	Engineering Works	Drawings Number	001

CCTV Straight Upside Structure (2-2)

(Normal Type : 15m)

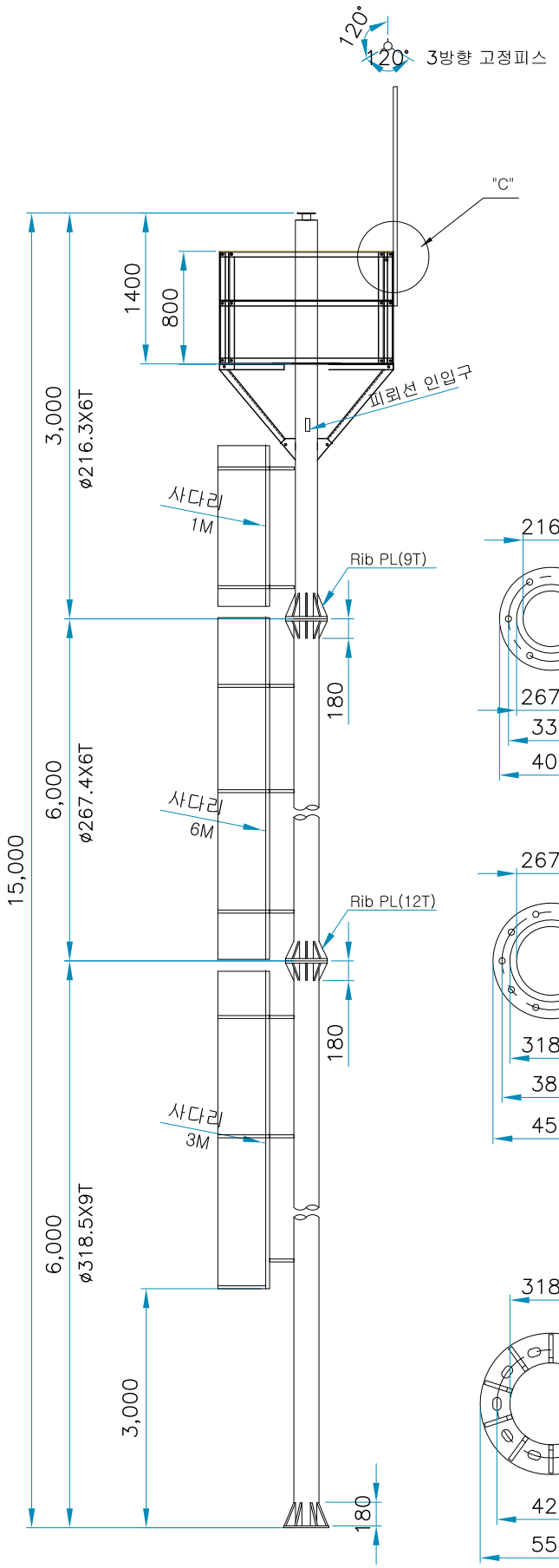

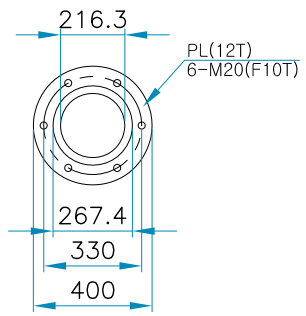

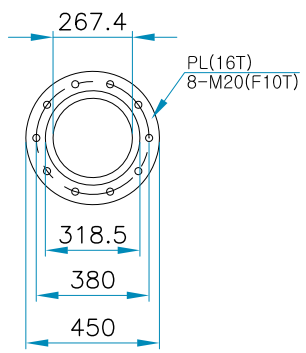

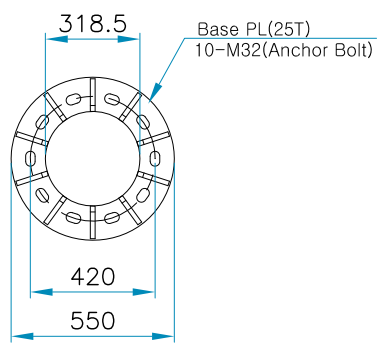

Detail "TOP"

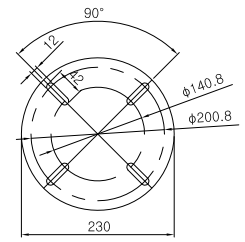

카메라 사양에 맞추어 변경

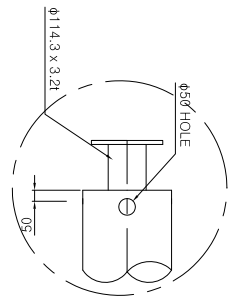

Detail "C"

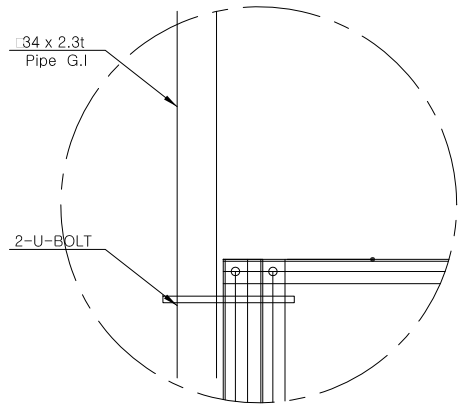

Lightning Arrester bracket detail

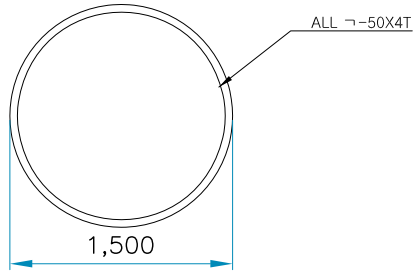

안전망 상부

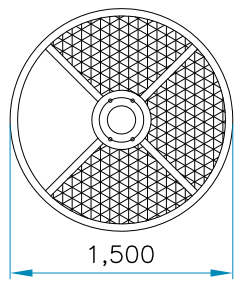

안전망 바닥

NOTE

1. Implements and instruments should be manufactured to fit to installation site and conditions.
2.All steel pipes must be made of SPS400.
3. For making a weld and joint between tips of steel pipes, it must go all around of pipes and use fillet welding method.
4. Welding point of steel pipe and Rib should be trimmed to clear because it its fatigue strength get decreased easily.
5. All steel materials and bolts take molten and galvanized process.
6. Careful treatment required in moving and positioning instruments to avoid deformation.
7. It basically uses double nuts in jointing ANCHOR BOLT.
   (But, single nut in FLANGE BOLT)
8. Steel pipe branch joint should be welded according to a detailed drawing and meet the necessary throat thickness.

ASUNCION CITYHALL, REPUBLIC OF PARAGUAY KOICA	Project Name	The Establishment of Advanced Traffic Management System(ATMS) in Asuncion, Paraguay						Scale	NONE	Drawings Name	CCTV Straight Upside Structure (2-2)
	Design Construction Company	TRACOM						CAD Name	ASU-CV-002		
			Revisions	Day	Reason	Drawed by	Checked by	Approved by	Sector	Engineering Works	Drawings Number	2

C C T V Sub Structure (1-1)

(H = 15m)

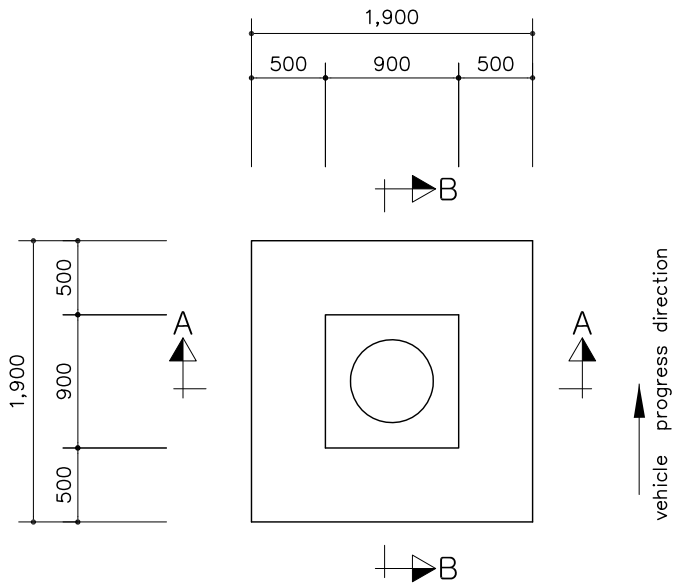

Plane Figure

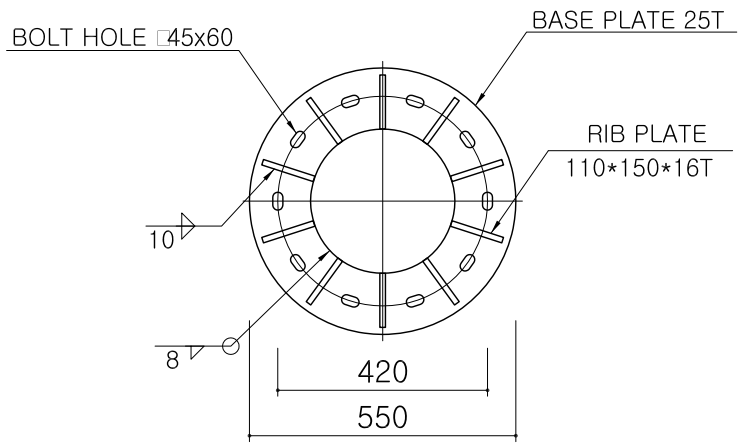

Base Ptate Detail

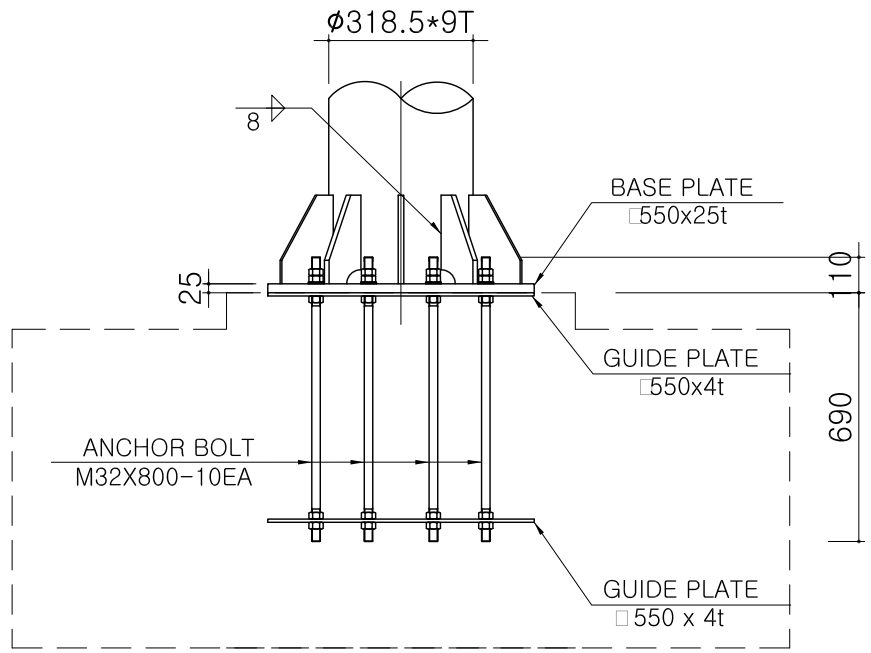

Anchor bolt Detail

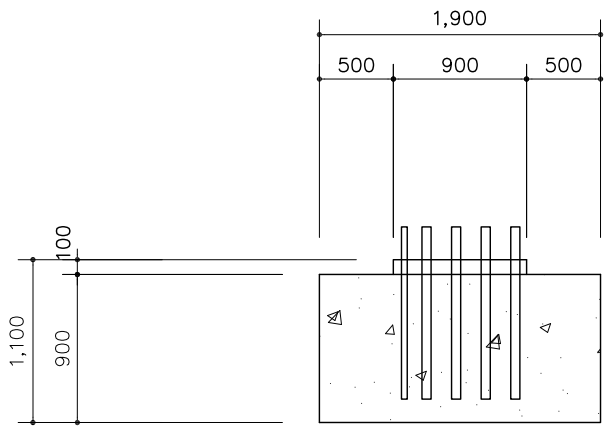

Cross Section A-A

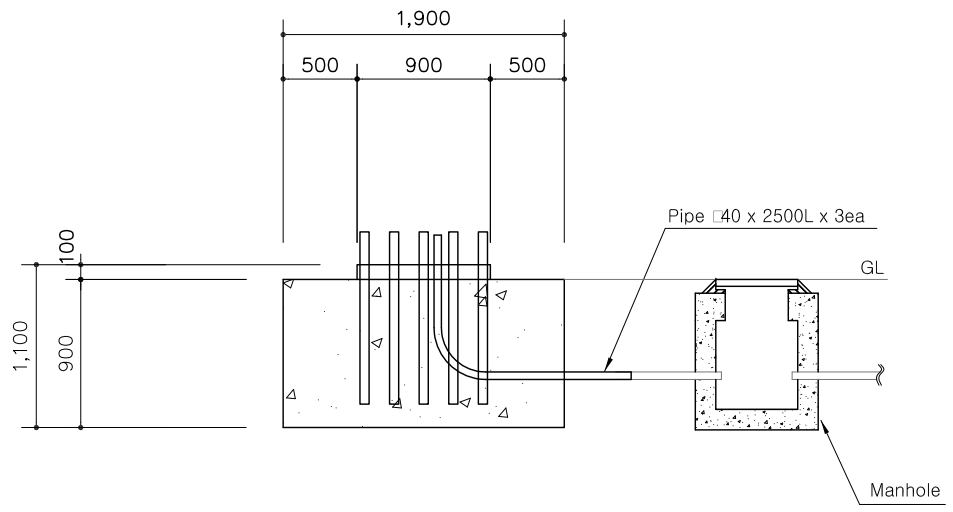

Cross Section B-B

Qeyd

Class 1 (25-210)
In order to importance of polls maximum gravels size must be 25m/m(# 57), and Design Criteria strength of the 28th is more than 210kg/㎠ of concrete.

ASUNCION CITYHALL, REPUBLIC OF PARAGUAY KOICA	Project Name	The Establishment of Advanced Traffic Management System(ATMS) in Asuncion, Paraguay						Scale	NONE	Drawings Name	CCTV Sub Structure (1-1)
	Design Construction Company	TRACOM						CAD Name	ASU-CV-003		
			Revisions	Day	Reason	Drawed by	Checked by	Approved by	Sector	Engineering Works	Drawings Number	3

C C T V Sub Structure (1-2)

(H = 15m)

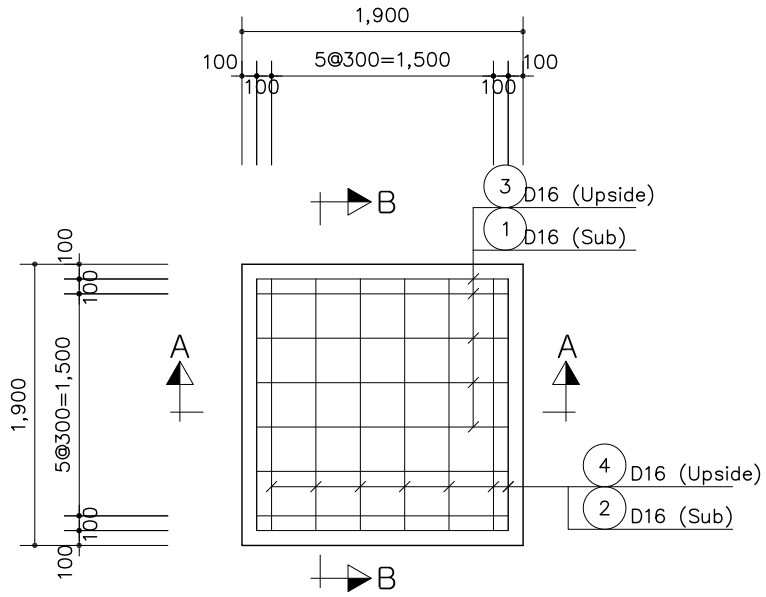

Plane Figure

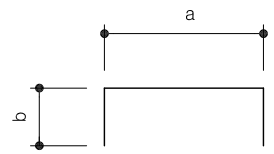

1	D16	L=3.500	N=8	6	D16	L=1.700	N=3
		a= 1.700	b= 900			a= 700	b= 500
2	D16	L=3.500	N=8	7	D16	L=1.700	N=3
		a= 1.700	b= 900			a= 700	b= 500
3	D16	L=2.500	N=8	8	D13	L=1.100	N=9
		a= 1.700	b= 400			a= 900	b= 100
4	D16	L=2.500	N=8	9	D13	L=1.900	N=2
		a= 1.700	b= 400			a= 1.700	b= 100
5	D16	L=5.100	N=4	10	D13	L=1.900	N=2
		a= 1.700	b= 1.700			a= 1.700	b= 100

Steel Detail

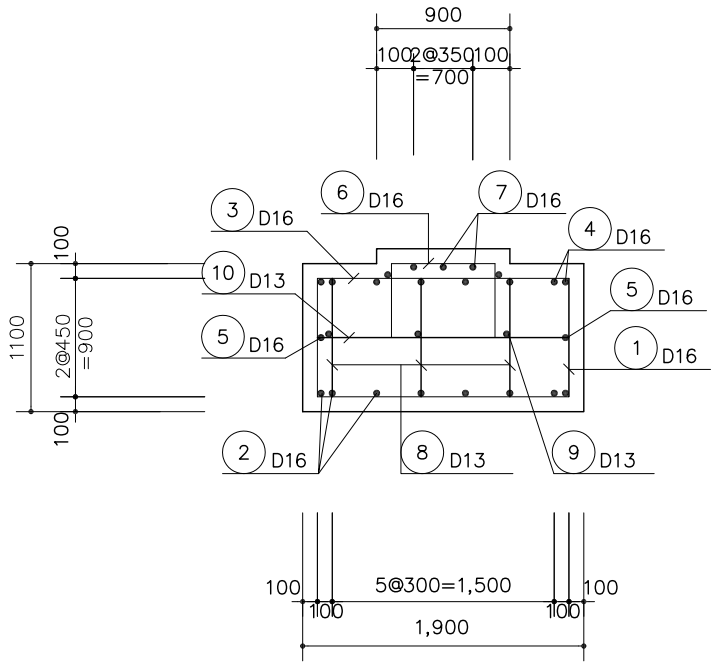

Cross Section A-A

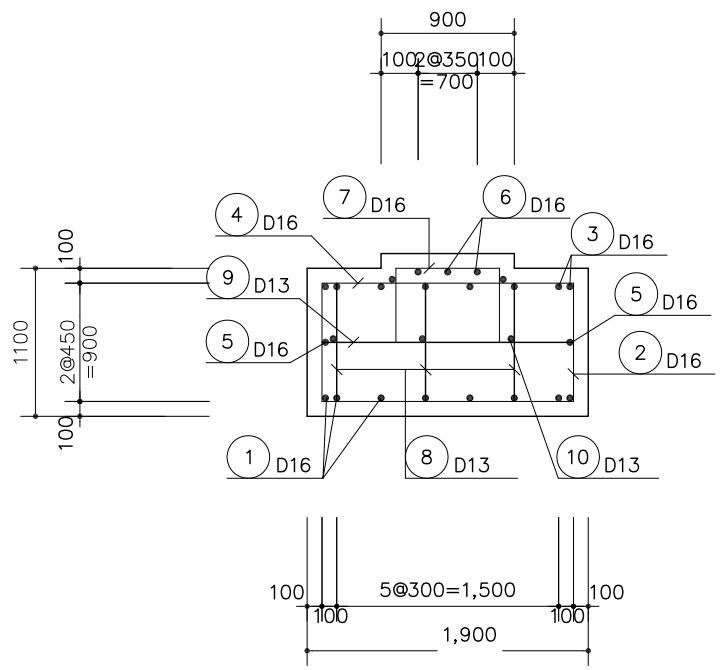

Cross Section B-B

Steel Material List

(Each Point)

NO.	Diameter	Length	Quantity	Total Length	Unit Weight	Total Weight	Remark
1	D16	3.500	8	28.000			ADD 3%
2	"	3.500	8	28.000			
3	"	2.500	8	20.000			
4	"	2.500	8	20.000			
5	"	5.100	4	20.400			
6	"	1.700	3	5.100			
7	"	1.700	3	5.100			
total				126.600	1.560	0.197	0.203
8	D13	1.100	9	9.900			
9	"	1.900	2	3.800			
10	"	1.900	2	3.800			
C	"	2.509	1	2.509			
total				20.009	0.995	0.020	0.021

ASUNCION CITYHALL,
REPUBLIC OF PARAGUAY

KOICA

Project Name	The Establishment of Advanced Traffic Management System(ATMS) in Asuncion, Paraguay					Scale	NONE	Drawings Name	CCTV Sub Structure (1-2)
Design Construction Company	TRACOM					CAD Name	ASU-CV-004		
		Revisions	Day	Reason	Drawed by / Checked by / Approved by	Sector	Engineering Works	Drawings Number	4

C C T V Sub Structure (2-1)

(H = 15m)

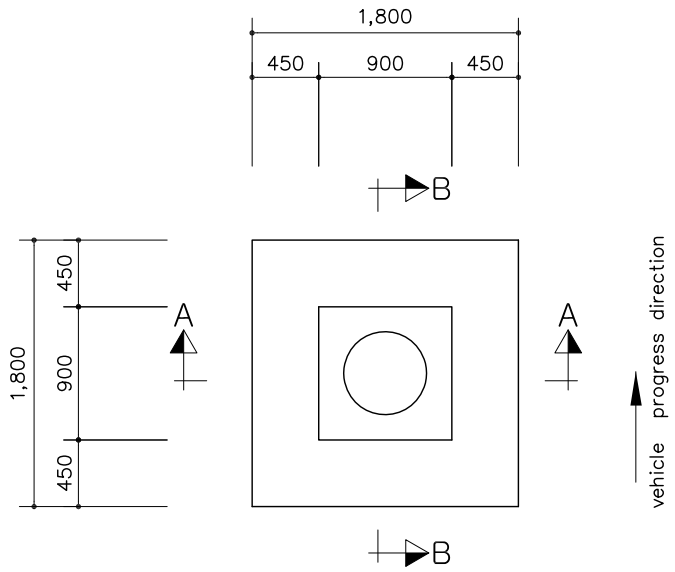

Plane Figure

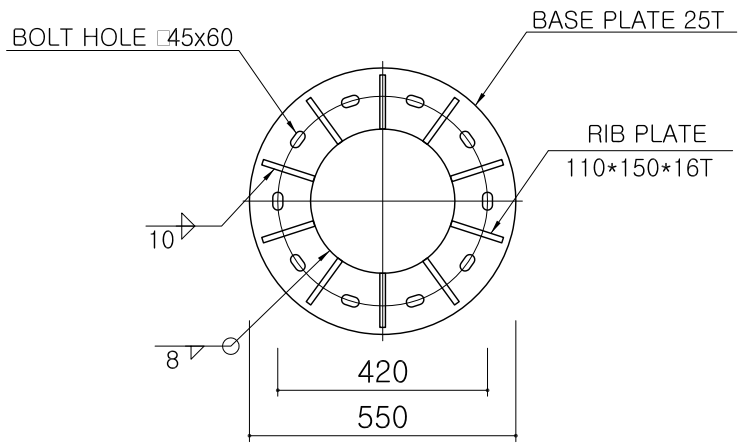

Base Ptate Detail

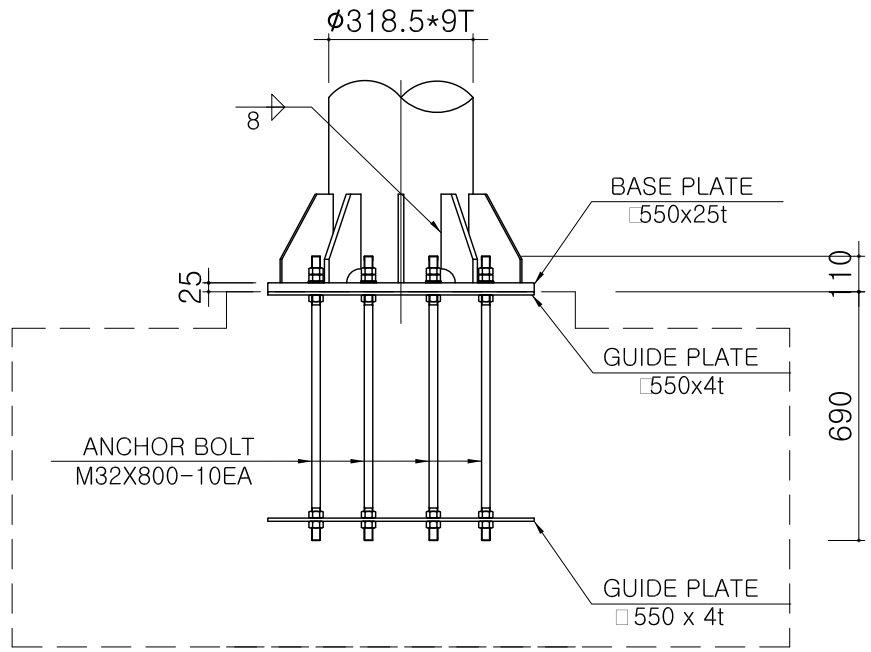

Anchor bolt Detail

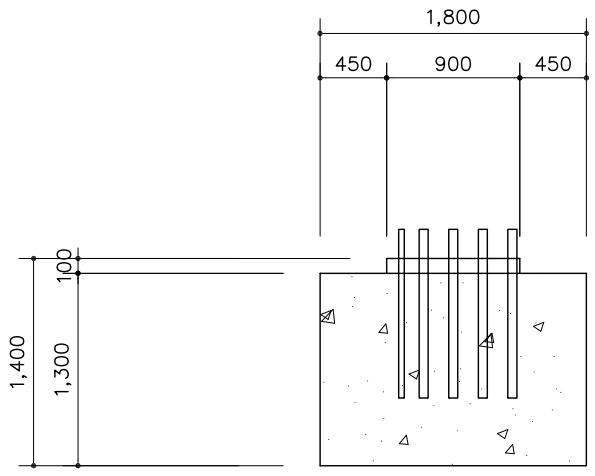

Cross Section A-A

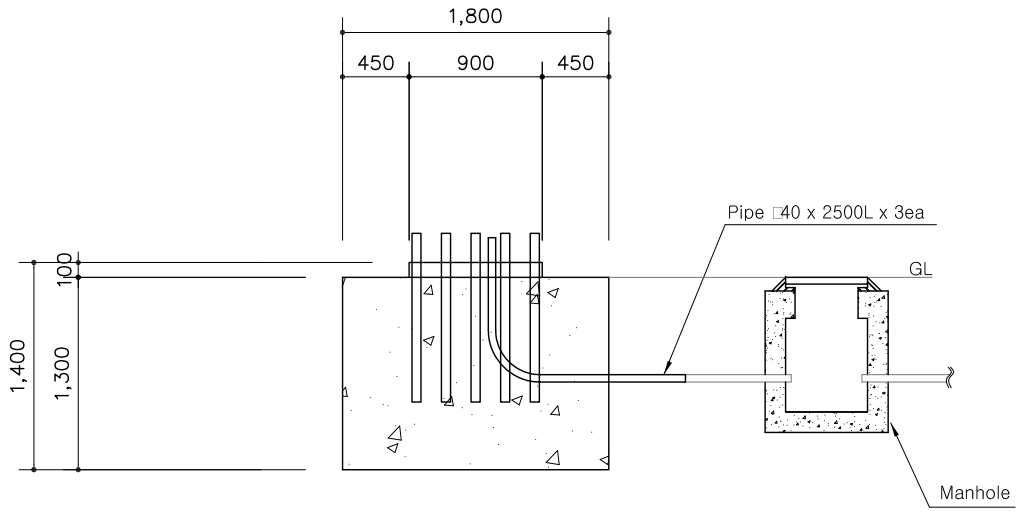

Cross Section B-B

Qeyd

Class 1 (25-210)
In order to importance of polls maximum gravels size must be 25m/m(# 57), and Design Criteria strength of the 28th is more than 210kg/㎠ of concrete.

ASUNCION CITYHALL, REPUBLIC OF PARAGUAY KOICA	Project Name	The Establishment of Advanced Traffic Management System(ATMS) in Asuncion, Paraguay						Scale	NONE	Drawings Name	CCTV Sub Structure (2-1)
	Design Construction Company	TRACOM						CAD Name	ASU-CV-005		
			Revisions	Day	Reason	Drawed by	Checked by	Approved by	Sector	Engineering Works	Drawings Number	5

C C T V Sub Structure (2-2)

(H = 15m)

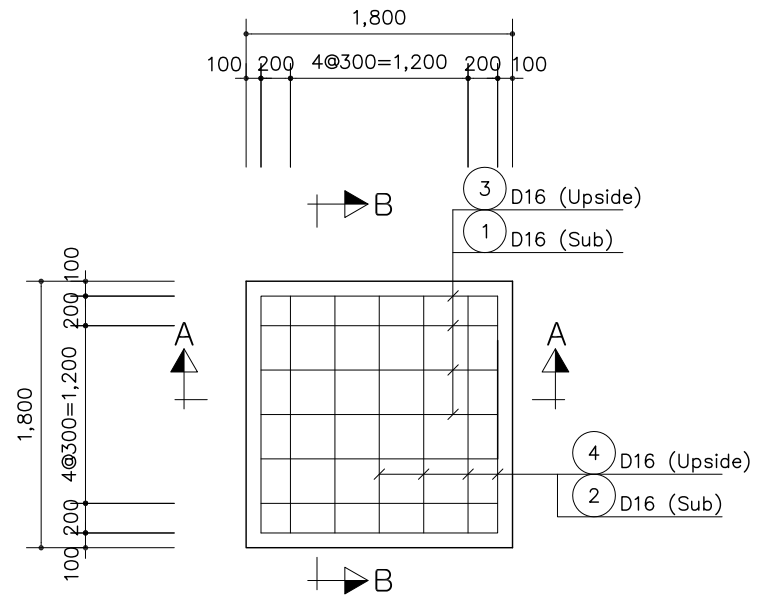

Plane Figure

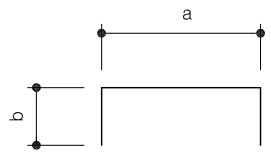

1	D16	L=3.800	N=7	6	D16	L=1.700	N=3
		a= 1.600	b= 1.100			a= 700	b= 500
2	D16	L=3.800	N=7	7	D16	L=1.700	N=3
		a= 1.600	b= 1.100			a= 700	b= 500
3	D16	L=2.400	N=7	8	D13	L=1.300	N=9
		a= 1.600	b= 400			a= 1.100	b= 100
4	D16	L=2.400	N=7	9	D13	L=1.800	N=6
		a= 1.600	b= 400			a= 1.600	b= 100
5	D16	L=3.600	N=8	10	D13	L=1.800	N=6
		a= 1.600	b= 1.000			a= 1.600	b= 100

Steel Detail

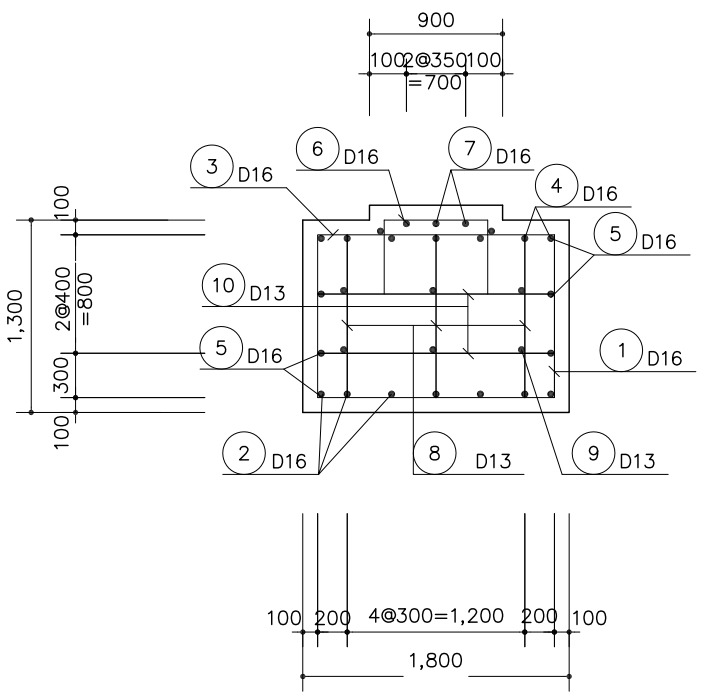

Cross Section A-A

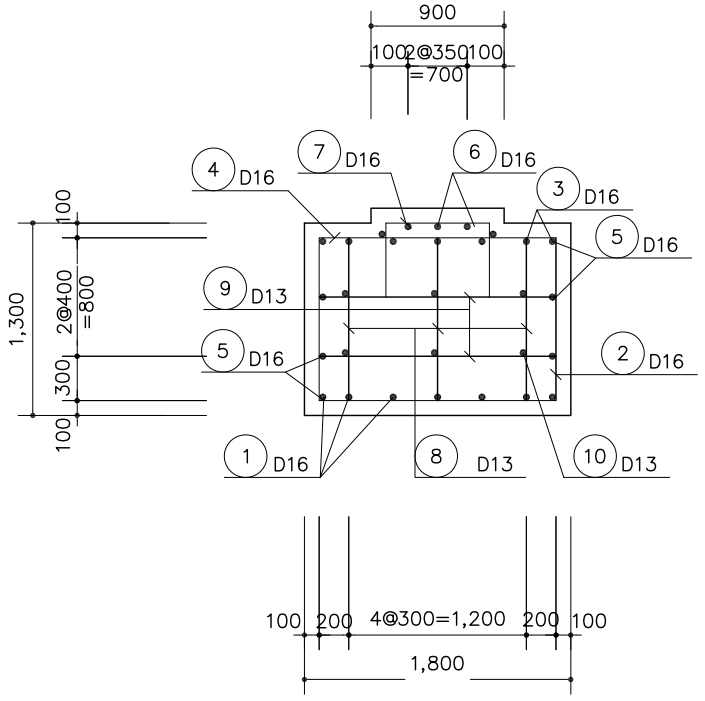

Cross Section B-B

Steel Material List

(Each Point)

NO.	Diameter	Length	Quantity	Total Length	Unit Weight	Total Weight	Remark
1	D16	3.800	7	26.600			ADD 3%
2	"	3.800	7	26.600			
3	"	2.400	7	16.800			
4	"	2.400	7	16.800			
5	"	3.600	8	28.800			
6	"	1.700	3	5.100			
7	"	1.700	3	5.100			
total				125.800	1.560	0.196	0.202
8	D13	1.300	9	11.700			
9	"	1.800	6	10.800			
10	"	1.800	6	10.800			
C	"	2.509	1	2.509			
total				35.809	0.995	0.036	0.037

ASUNCION CITYHALL,
REPUBLIC OF PARAGUAY

KOICA

Project Name	The Establishment of Advanced Traffic Management System(ATMS) in Asuncion, Paraguay					Scale	NONE	Drawings Name	CCTV Sub Structure (2-2)
						CAD Name	ASU-CV-006		
Design Construction Company	TRACOM	Revisions	Day	Reason	Drawed by / Checked by / Approved by	Sector	Engineering Works	Drawings Number	6

C C T V Sub Structure (3-1)

(H = 15m)

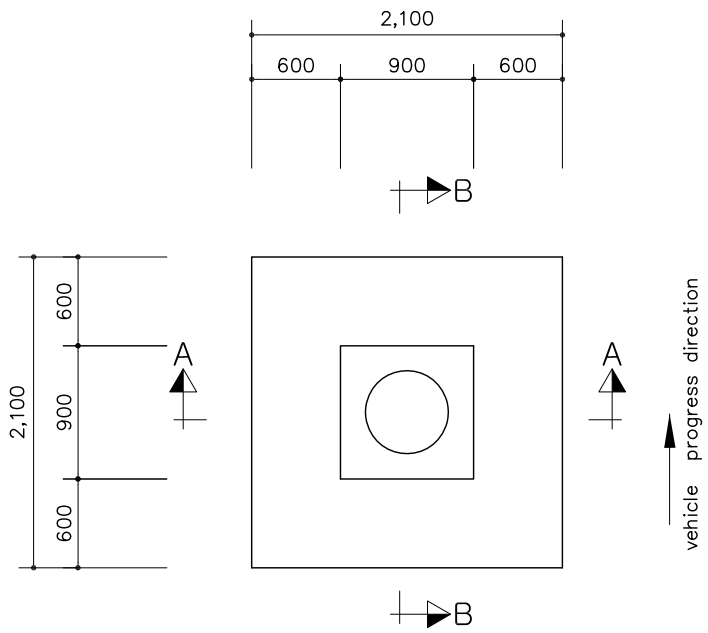

Plane Figure

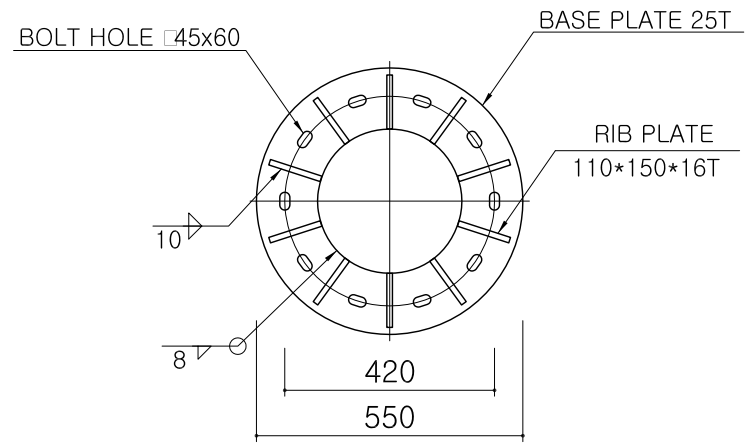

Base Ptate Detail

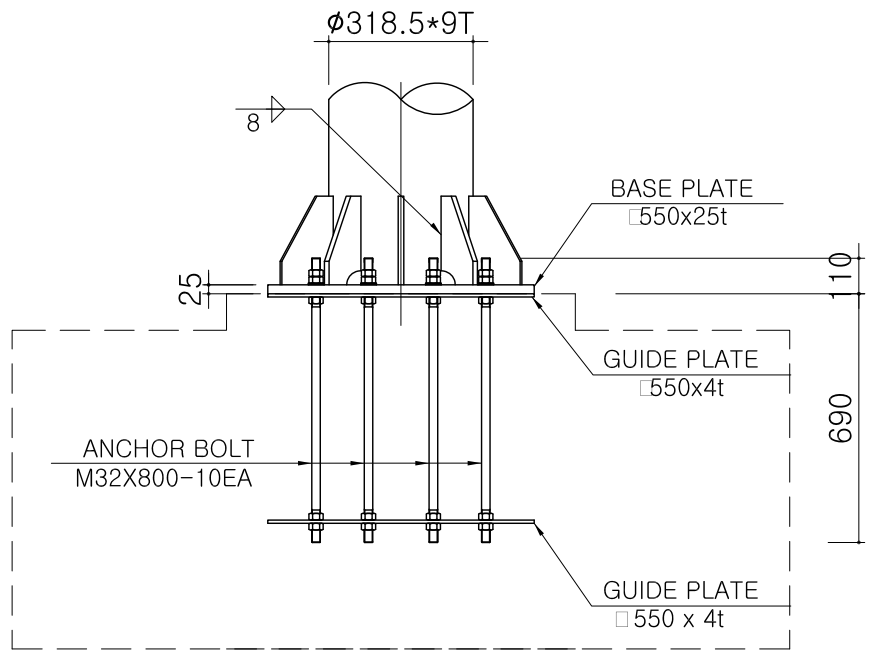

Anchor bolt Detail

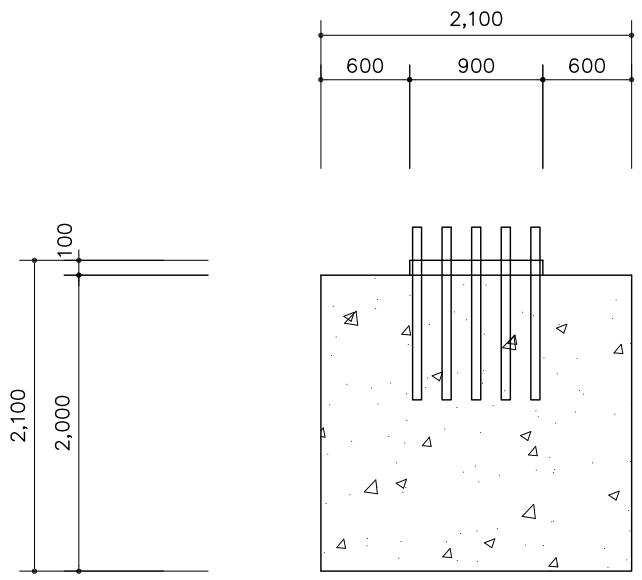

Cross Section A-A

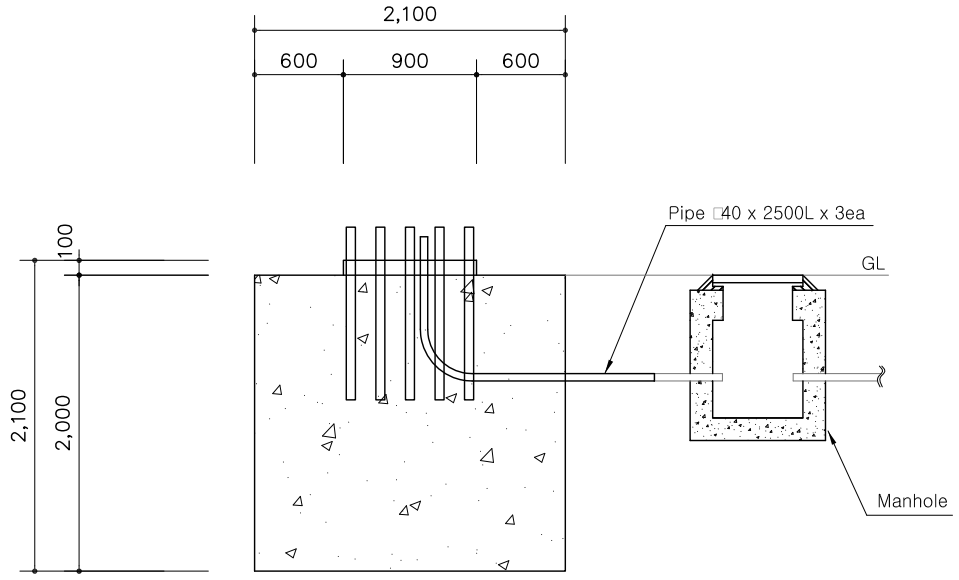

Cross Section B-B

Qeyd

Class 1 (25-210)
In order to importance of polls maximum gravels size must be 25m/m(# 57), and Design Criteria strength of the 28th is more than 210kg/㎠ of concrete.

ASUNCION CITYHALL, REPUBLIC OF PARAGUAY KOICA	Project Name	The Establishment of Advanced Traffic Management System(ATMS) in Asuncion, Paraguay						Scale	NONE	Drawings Name	CCTV Sub Structure (3-1)
	Design Construction Company	TRACOM						CAD Name	ASU-CV-007		
			Revisions	Day	Reason	Drawed by	Checked by	Approved by	Sector	Engineering Works	Drawings Number	7

C C T V Sub Structure (3-2)

(H = 15m)

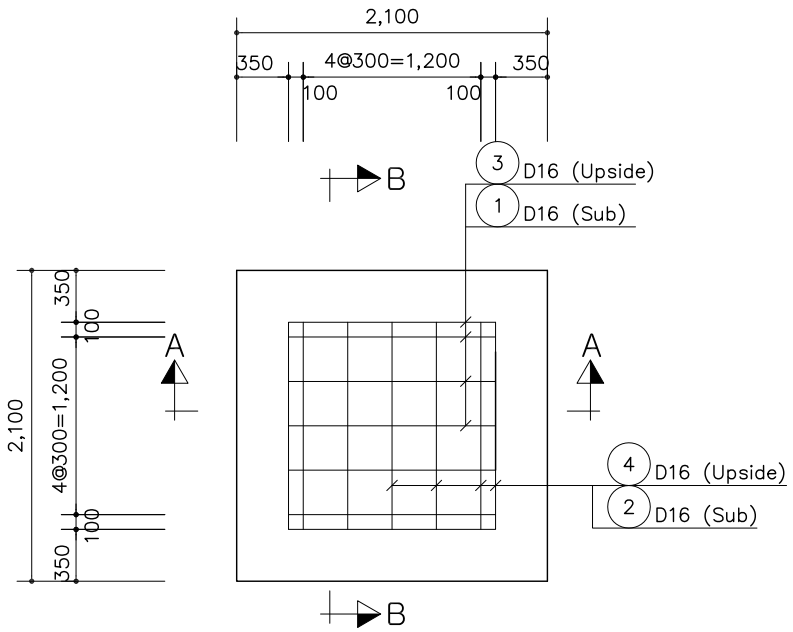

Plane Figure

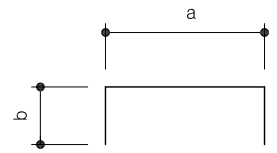

1	D16	L=5.000	N=7	6	D16	L=1.700	N=3
		a= 1.400	b= 1.800			a= 700	b= 500
2	D16	L=5.000	N=7	7	D16	L=1.700	N=3
		a= 1.400	b= 1.800			a= 700	b= 500
3	D16	L=2.200	N=7	8	D13	L=2.000	N=9
		a= 1.400	b= 400			a= 1.800	b= 100
4	D16	L=2.200	N=7	9	D13	L=1.600	N=12
		a= 1.400	b= 400			a= 1.400	b= 100
5	D16	L=3.400	N=16	10	D13	L=1.600	N=12
		a= 1.400	b= 1.000			a= 1.400	b= 100

Steel Detail

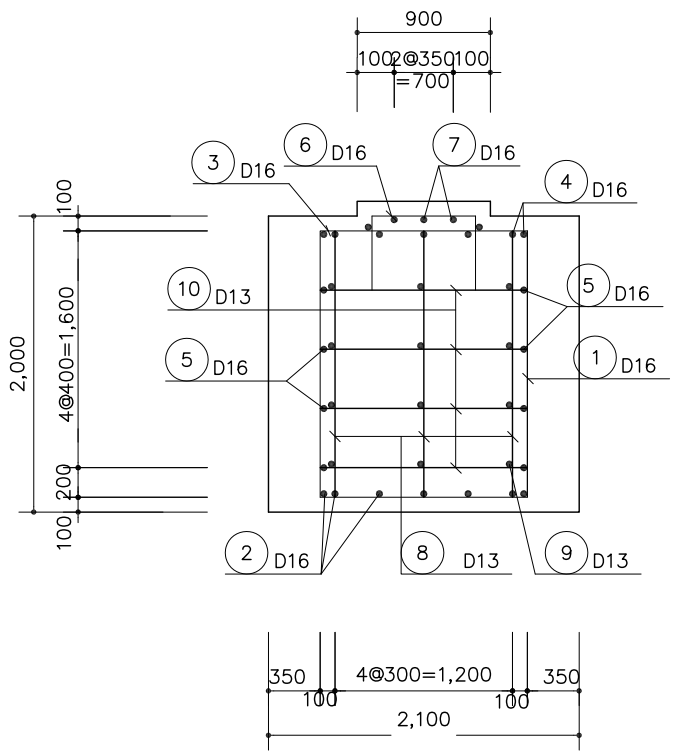

Cross Section A-A

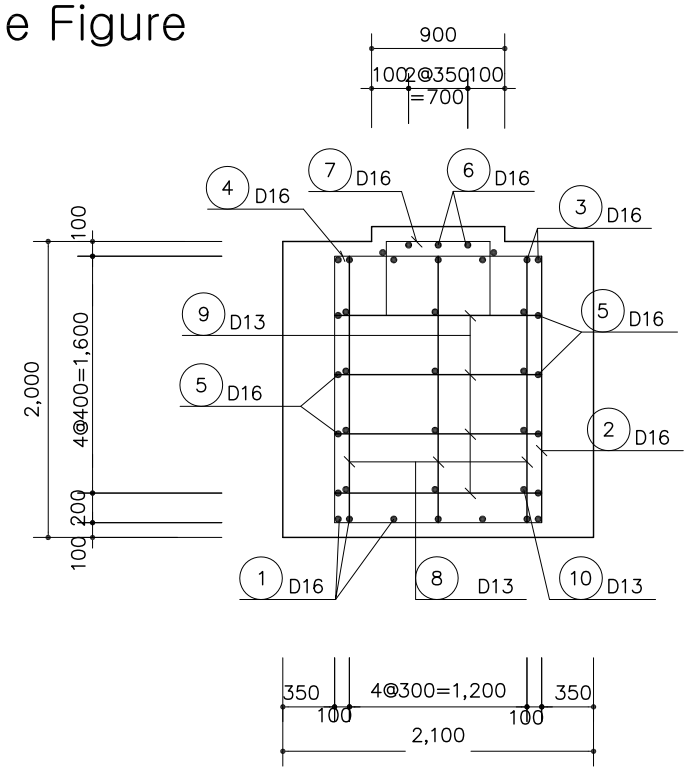

Cross Section B-B

Steel Material List

(Each Point)

NO.	Diameter	Length	Quantity	Total Length	Unit Weight	Total Weight	Remark
1	D16	5.000	7	35.000			ADD 3%
2	"	5.000	7	35.000			
3	"	2.200	7	15.400			
4	"	2.200	7	15.400			
5	"	3.400	16	54.400			
6	"	1.700	3	5.100			
7	"	1.700	3	5.100			
total				165.400	1.560	0.257	0.265
8	D13	2.000	9	18.000			
9	"	1.600	12	19.200			
10	"	1.600	12	19.200			
C	"	2.509	1	2.509			
total				58.909	0.995	0.059	0.060

ASUNCION CITYHALL,
REPUBLIC OF PARAGUAY

KOICA

Project Name	The Establishment of Advanced Traffic Management System(ATMS) in Asuncion, Paraguay						Scale	NONE	Drawings Name: CCTV Sub Structure (3-2)
Design Construction Company	TRACOM						CAD Name	ASU-CV-008	
		Revisions	Day	Reason	Drawed by	Checked by	Approved by	Sector: Engineering Works	Drawings Number: 008

C C T V Sub Structure (4-1)

(H = 15m)

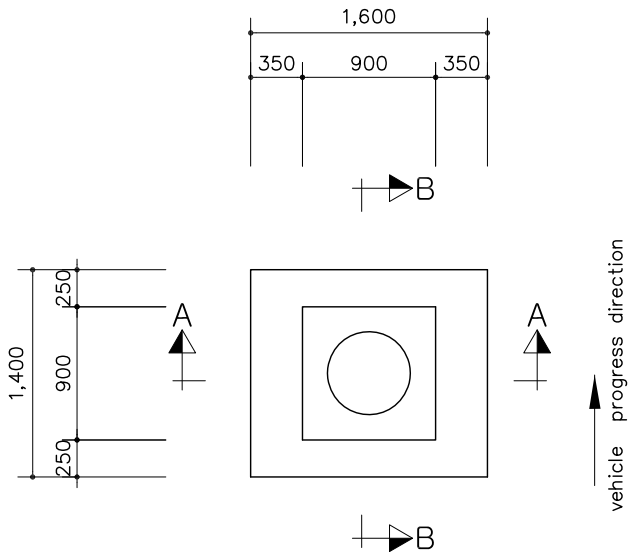

Plane Figure

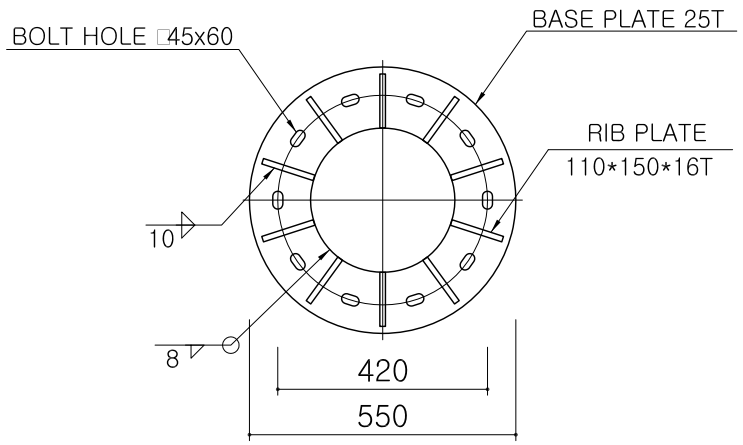

Base Ptate Detail

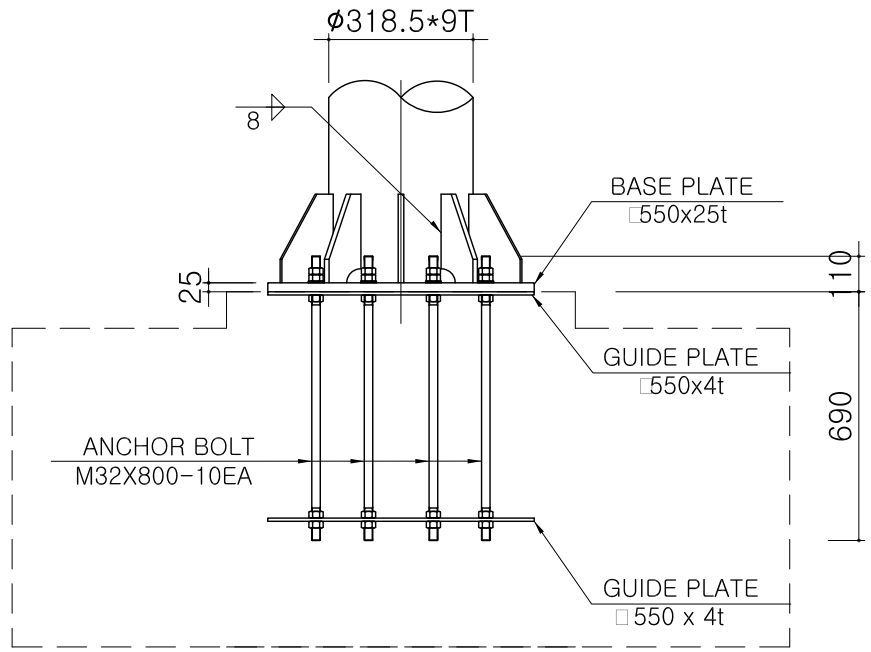

Anchor bolt Detail

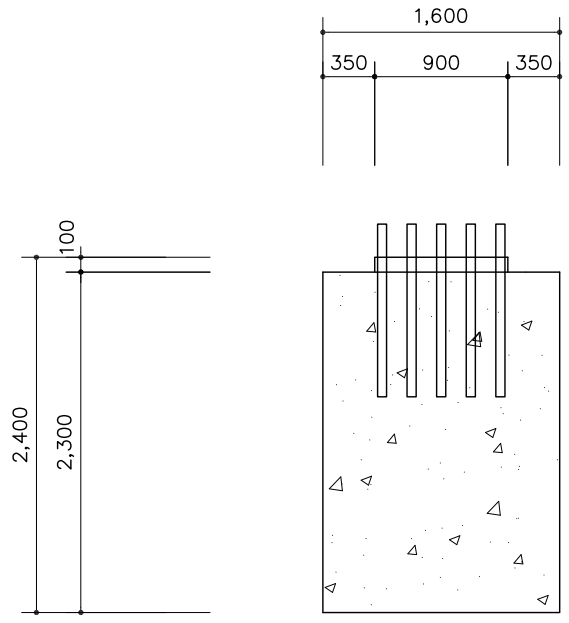

Cross Section A-A

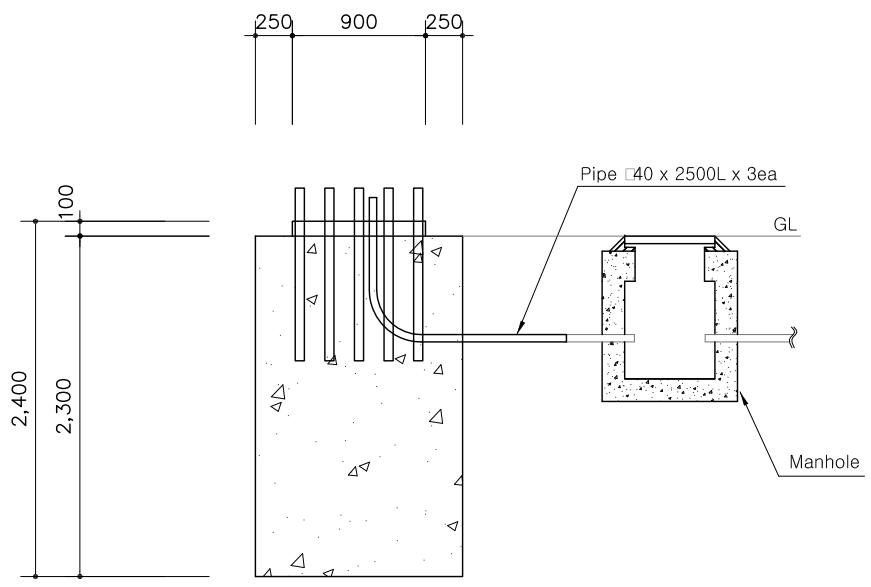

Cross Section B-B

Qeyd

Class 1 (25-210)
In order to importance of polls maximum gravels size must be 25m/m(# 57), and Design Criteria strength of the 28th is more than 210kg/㎠ of concrete.

ASUNCION CITYHALL, REPUBLIC OF PARAGUAY KOICA	Project Name	The Establishment of Advanced Traffic Management System(ATMS) in Asuncion, Paraguay						Scale	NONE	Drawings Name	CCTV Sub Structure (4-1)
	Design Construction Company	TRACOM						CAD Name	ASU-CV-009		
			Revisions	Day	Reason	Drawed by	Checked by	Approved by	Sector	Engineering Works	Drawings Number	9

C C T V Sub Structure (4-2)

(H = 15m)

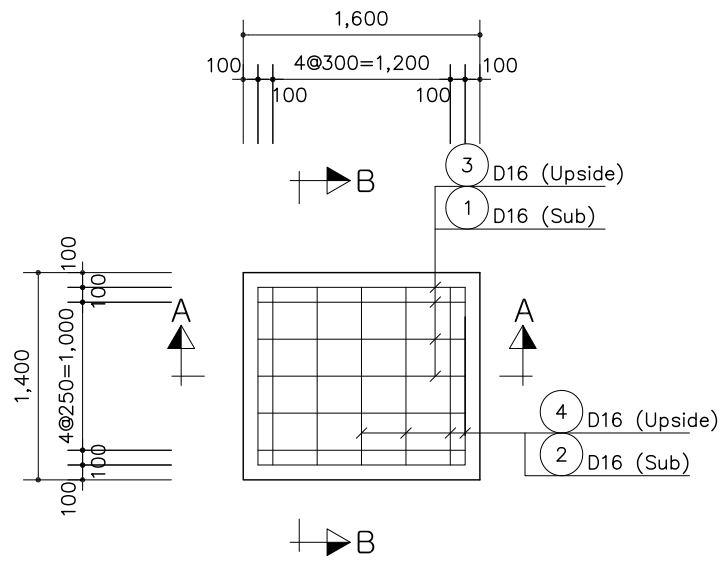

Plane Figure

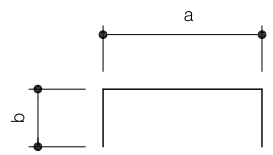

1	D16	L=5.600	N=7	6	D16	L=2.000	N=3
		a= 1.400	b= 2.100			a= 700	b= 650
2	D16	L=5.400	N=7	7	D16	L=2.000	N=3
		a= 1.200	b= 2.100			a= 700	b= 650
3	D16	L=2.400	N=7	8	D13	L=2.300	N=9
		a= 1.400	b= 500			a= 2.100	b= 100
4	D16	L=2.200	N=7	9	D13	L=1.400	N=12
		a= 1.200	b= 500			a= 1.200	b= 100
5	D16	L=3.100	N=16	10	D13	L=1.600	N=12
		a= 1.400	b= 850			a= 1.400	b= 100

Steel Detail

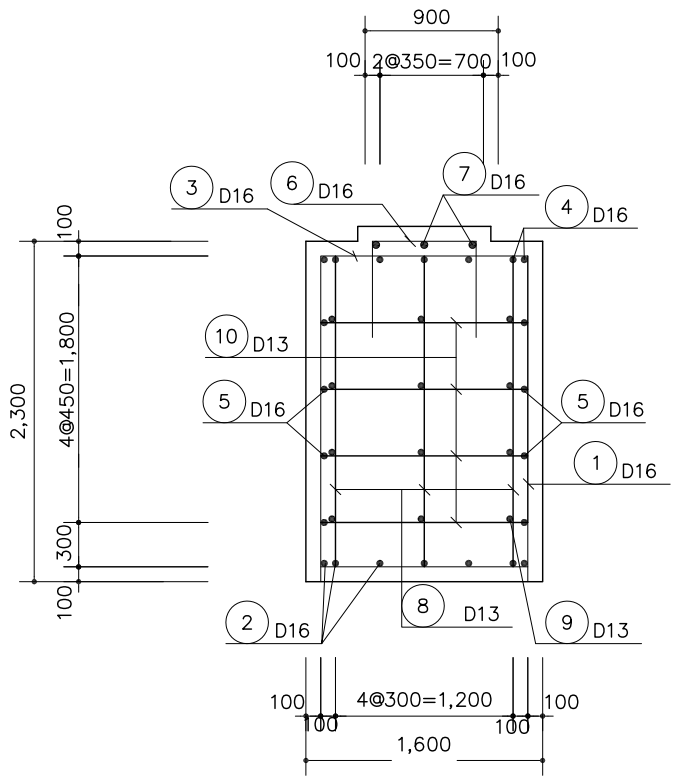

Cross Section A-A

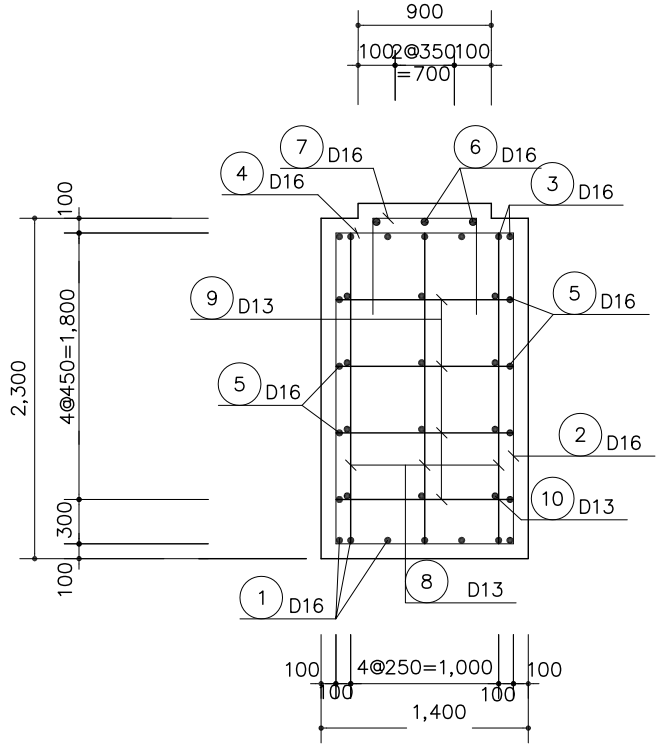

Cross Section B-B

Steel Material List

(Each Point)

NO.	Diameter	Length	Quantity	Total Length	Unit Weight	Total Weight	Remark
1	D16	5.600	7	39.200			ADD 3%
2	"	5.400	7	37.800			
3	"	2.400	7	16.800			
4	"	2.200	7	15.400			
5	"	3.100	8	24.800			
6	"	2.000	3	6.000			
7	"	2.000	3	6.000			
total				146.000	1.560	0.228	0.235
8	D13	2.300	9	20.700			
9	"	1.400	12	16.800			
10	"	1.600	12	19.200			
C	"	2.509	1	2.509			
total				59.209	0.995	0.059	0.061

ASUNCION CITYHALL, REPUBLIC OF PARAGUAY KOICA	Project Name	The Establishment of Advanced Traffic Management System(ATMS) in Asuncion, Paraguay					Scale	NONE	Drawings Name	CCTV Sub Structure (4-2)
	Design Construction Company	TRACOM					CAD Name	ASU-CV-010		
			Revisions	Day	Reason	Drawed by / Checked by / Approved by	Sector	Engineering Works	Drawings Number	10

C C T V Camera Detail

카메라 외형도

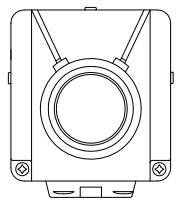

FRONT

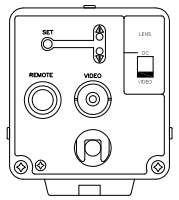

REAR

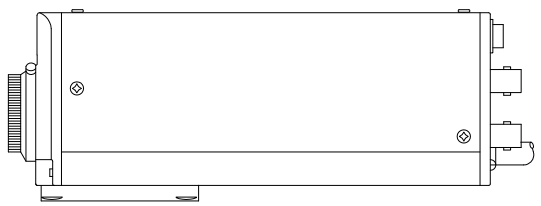

SIDE

렌즈 정면도 / 측면도

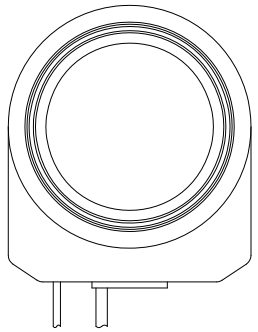

FRONT

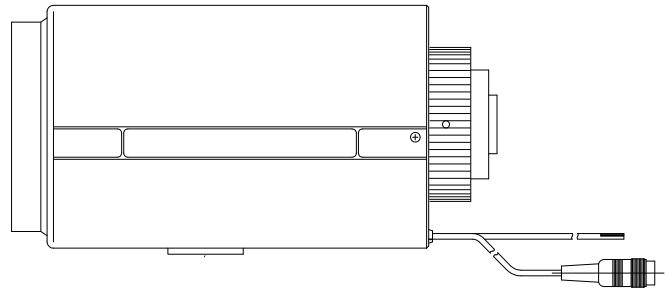

SIDE

팬틸트 정면도 / 측면도

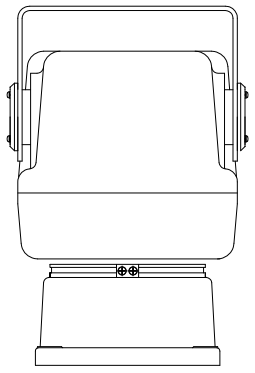

FRONT

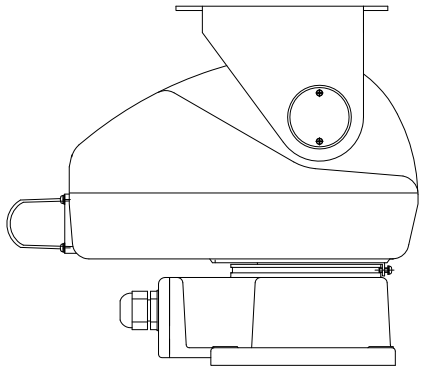

SIDE

하우징 측면도 / 배면도

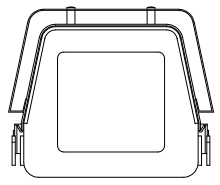

FRONT

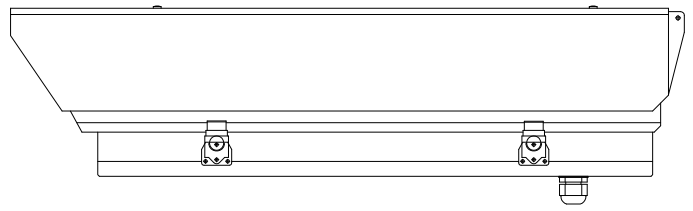

SIDE

NOTE. 구축시 사업감리단 협의결과에 따라 변경될수 있음

ASUNCION CITYHALL, REPUBLIC OF PARAGUAY KOICA	Project Name	The Establishment of Advanced Traffic Management System(ATMS) in Asuncion, Paraguay						Scale	NONE	Drawings Name	CCTV Camera Detail
	Design Construction Company	TRACOM						CAD Name	ASU-CV-011		
			Revisions	Day	Reason	Drawed by	Checked by	Approved by	Sector	Engineering Works	Drawings Number	011

C C T V Cabinet Detail

정 면 도

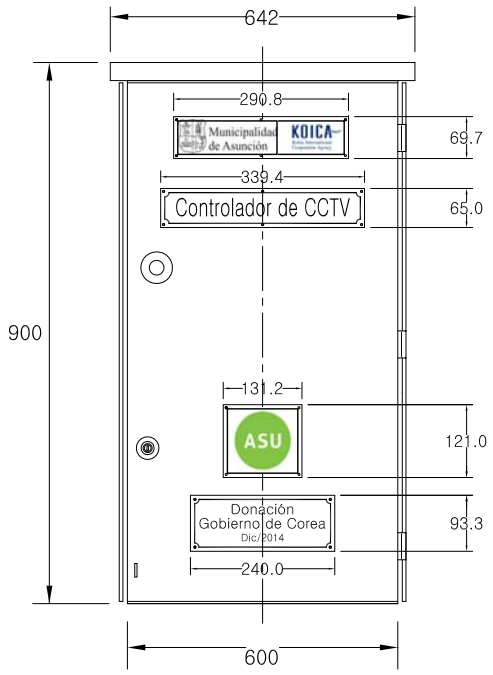

후 면 도

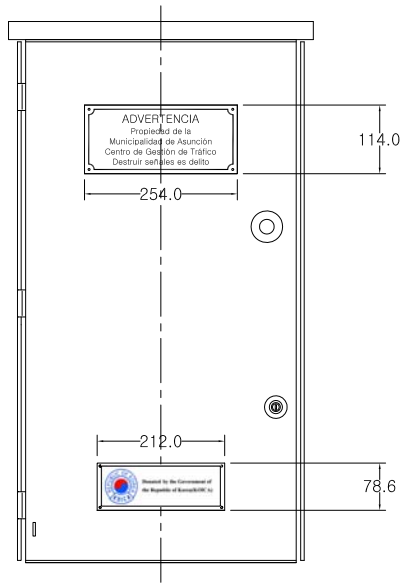

우 측 면 도

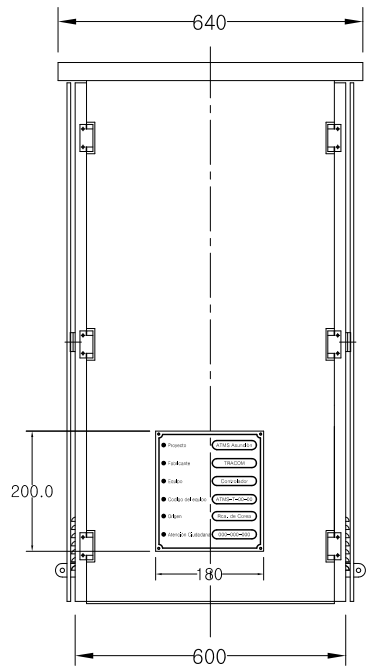

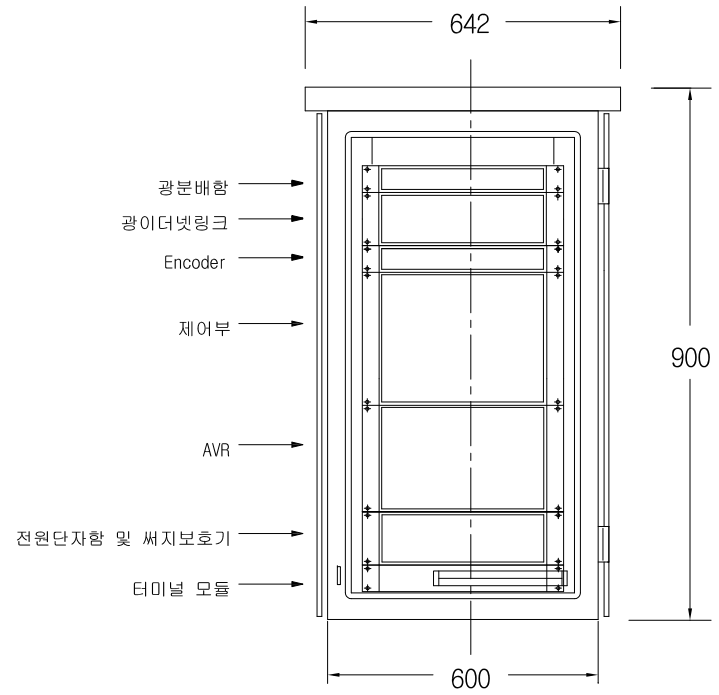

하 면 도

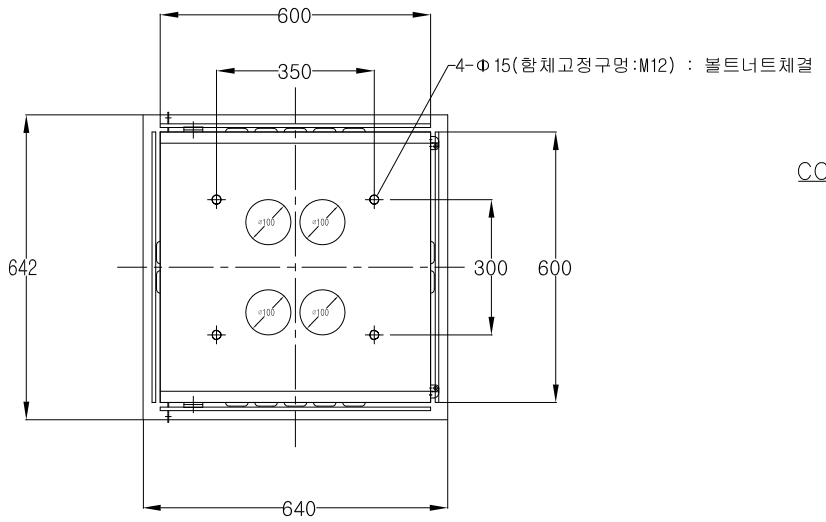

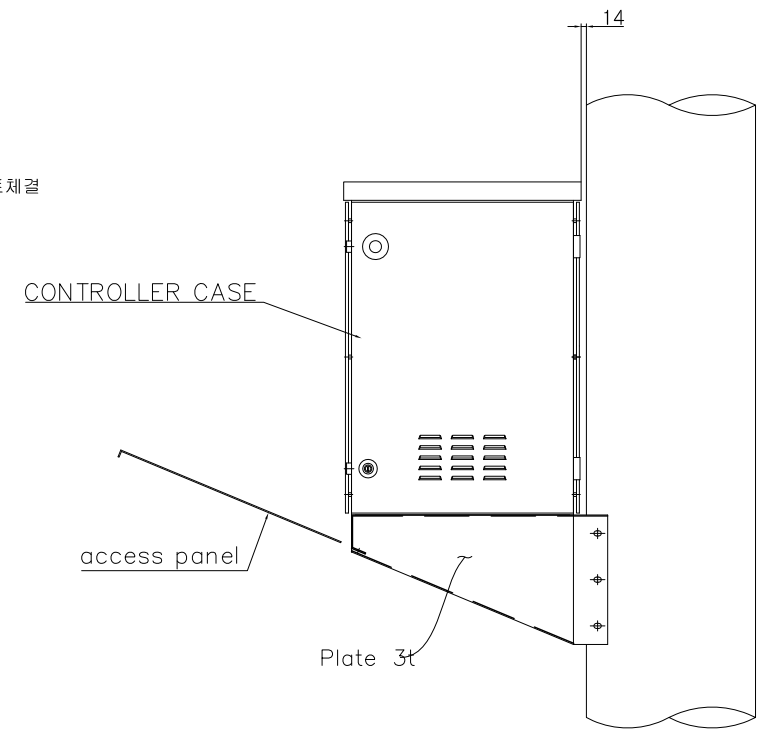

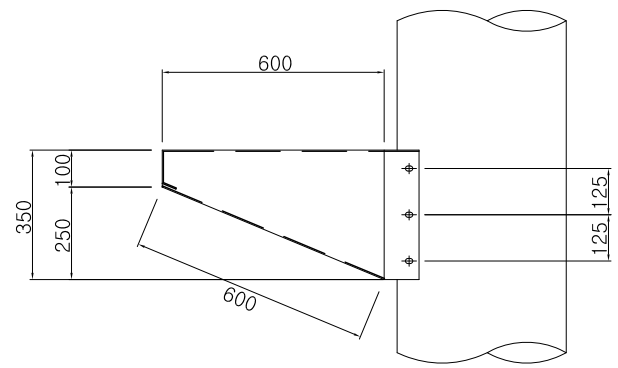

Qeyd

함체 재질 : 스테인레스 스틸(sus304 1.5t)

ASUNCION CITYHALL, REPUBLIC OF PARAGUAY KOICA	Project Name	The Establishment of Advanced Traffic Management System(ATMS) in Asuncion, Paraguay							Scale	NONE	Drawings Name	CCTV Cabinet Detail
	Design Construction Company	TRACOM							CAD Name	ASU-CV-013		
			Revisions	Day	Reason	Drawed by	Checked by	Approved by	Sector	Engineering Works	Drawings Number	013