Pedestrians Signal

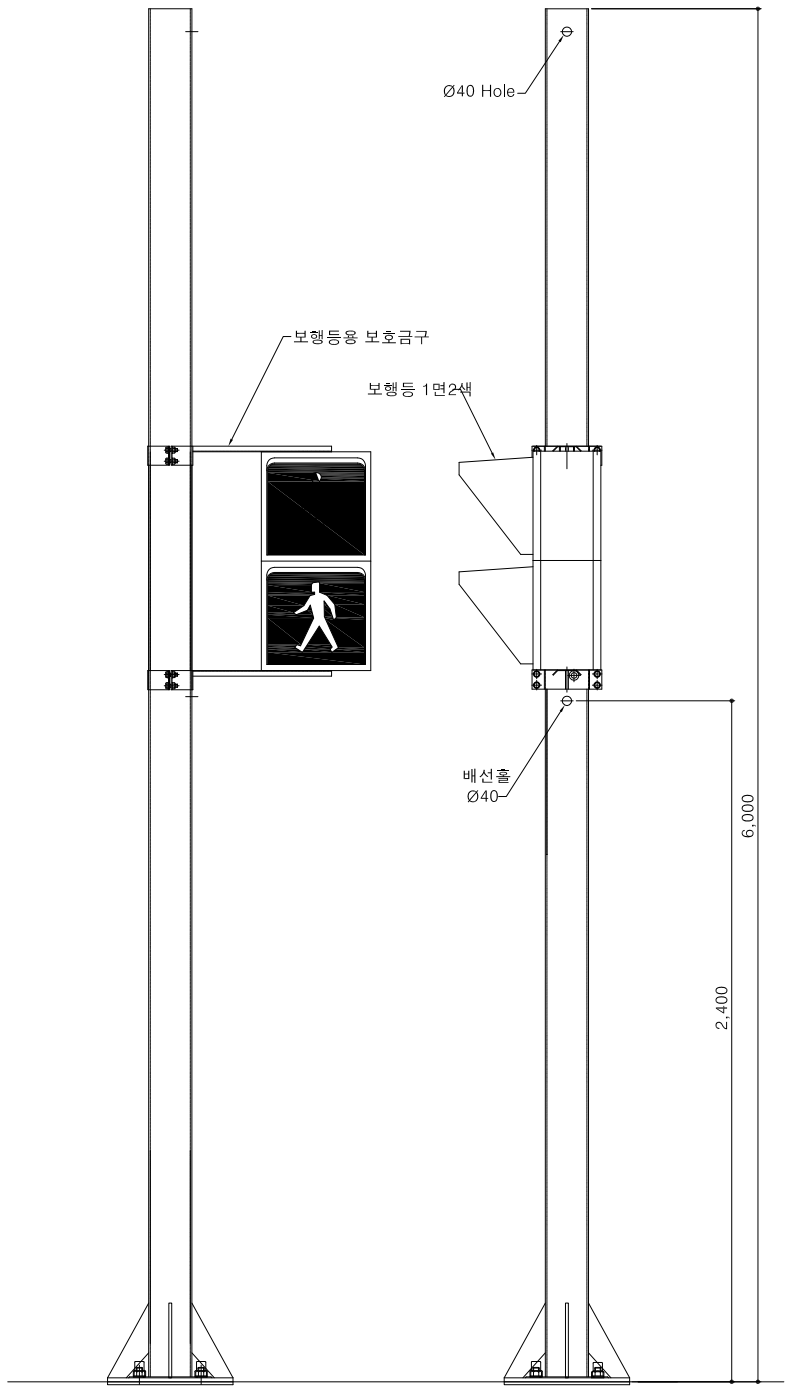

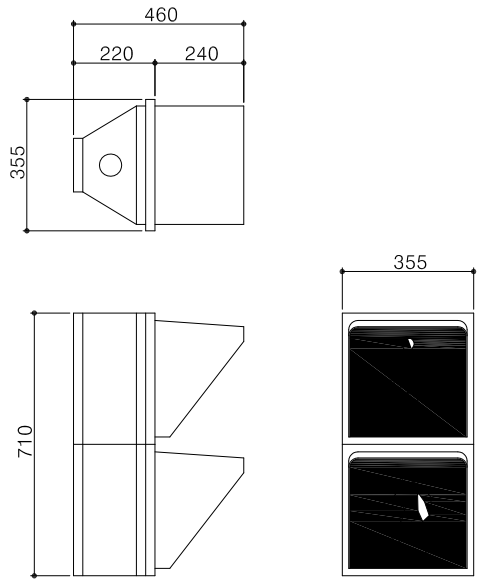

1면2색 보행자 신호등

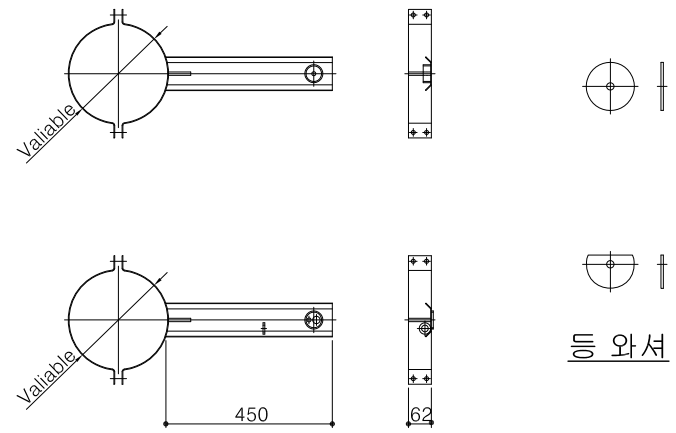

등 와셔

보행자 신호등용 보호금구
BAND 및 고정PL(4T)

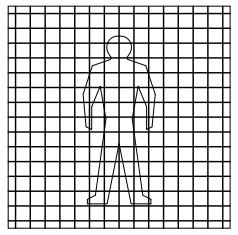

적색 사람정지 모양

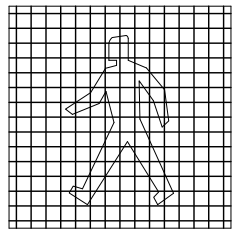

녹색 사람보행 모양

ASUNCION CITYHALL, REPUBLIC OF PARAGUAY KOICA	Project Name	The Establishment of Advanced Traffic Management System(ATMS) in Asuncion, Paraguay						Scale	NONE	Drawings Name	Pedestrians Signal
	Design Construction Company	TRACOM						CAD Name	ASU-CV-038		
			Revisions	Day	Reason	Drawed by	Checked by	Approved by	Sector	Engineering Works	Drawings Number	038

Pedestrian Pole Upside Structure

조 립 도

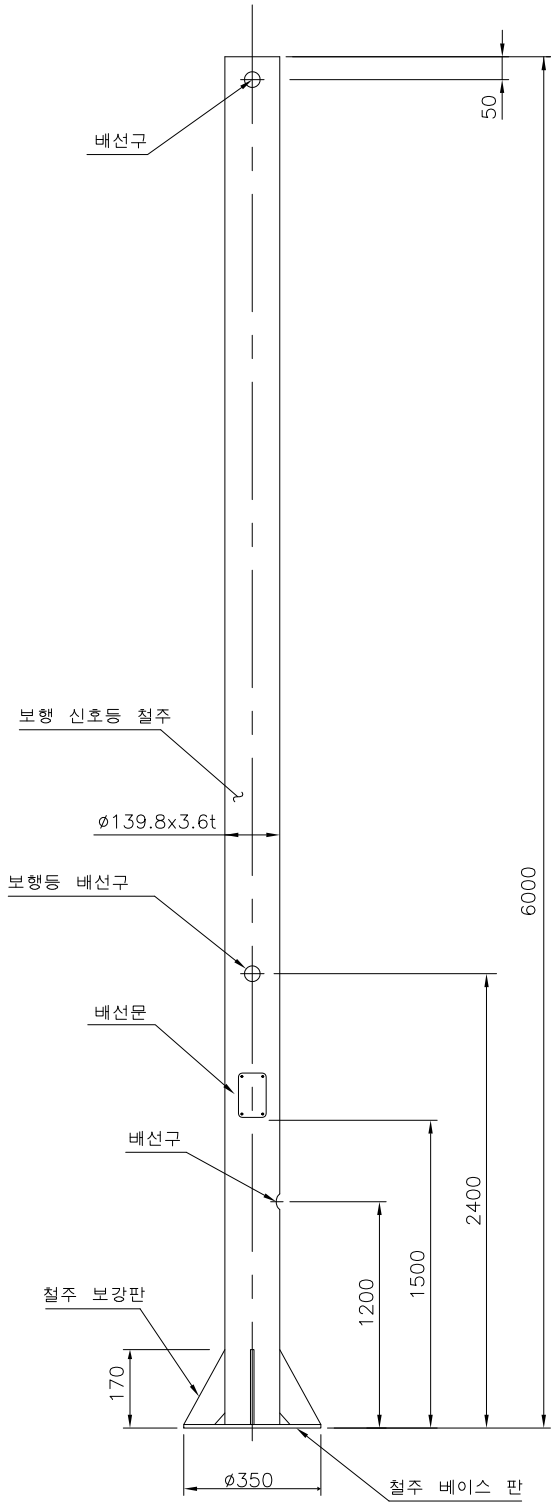

상 세 도

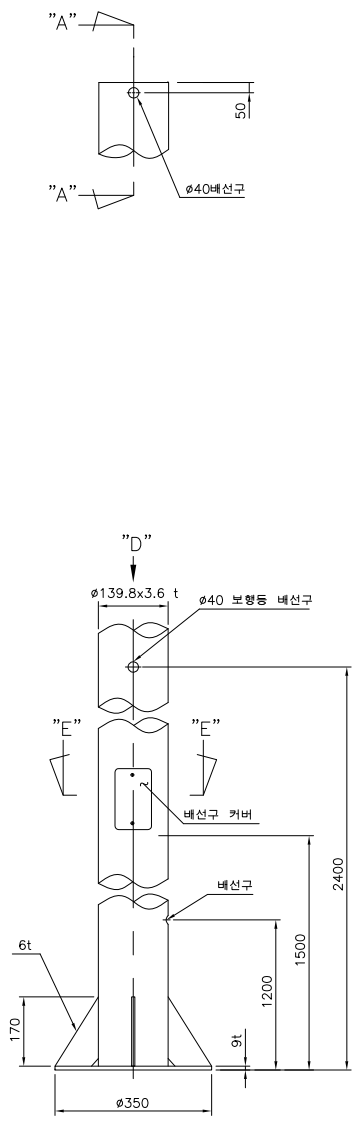

부 품 도

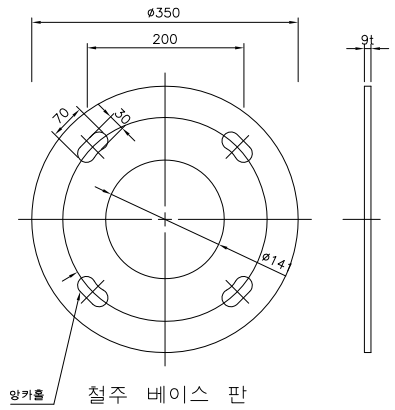

철주 베이스 판
MAT'L : SS400
Q'TY : 1 EA/SET

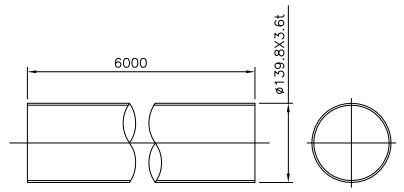

철주 파이프
MAT'L : KSD 3566
Q'TY : 1 EA/SET

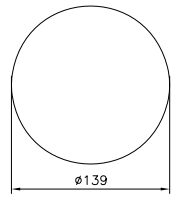

철주 캡
MAT'L : SS400
Q'TY : 1 EA/SET

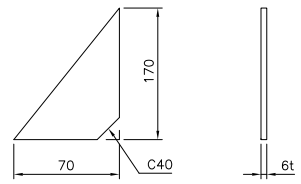

철주 베이스 판 보강대
MAT'L : SS400
Q'TY : 4 EA/SET

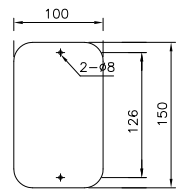

배선문 커버
MAT'L : STS 304
Q'TY : 1 EA/SET

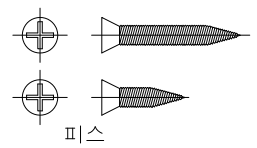

피스
MAT'L : STS304
Q'TY : 2 EA/SET(6x16-1EA, 6x38-1EA)

ASUNCION CITYHALL, REPUBLIC OF PARAGUAY KOICA	Project Name	The Establishment of Advanced Traffic Management System(ATMS) in Asuncion, Paraguay						Scale	NONE	Drawings Name	Pedestrian Pole Upside Structure
	Design Construction Company	TRACOM						CAD Name	ASU-CV-039		
			Revisions	Day	Reason	Drawed by	Checked by	Approved by	Sector	Engineering Works	Drawings Number	039

Pedestrian Pole Sub Structure

조 립 도

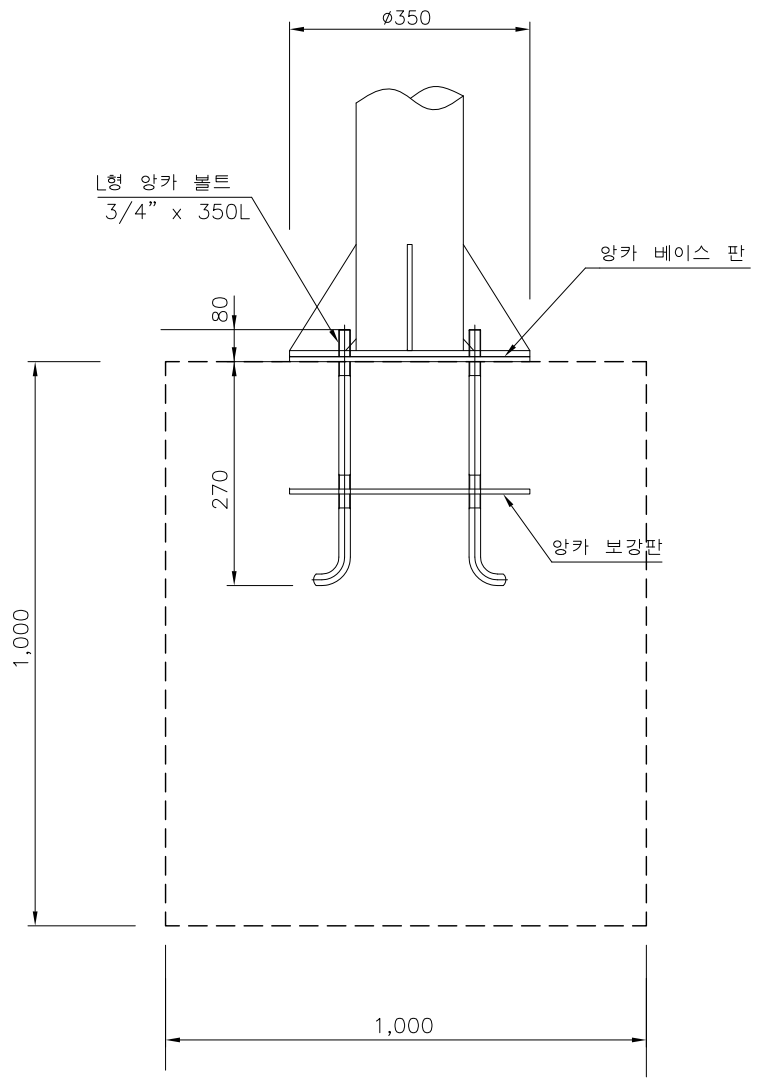

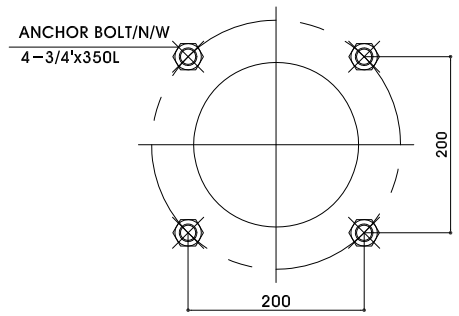

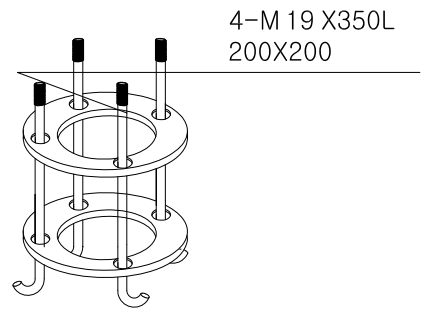

분리형 보행등주 앙카 제안

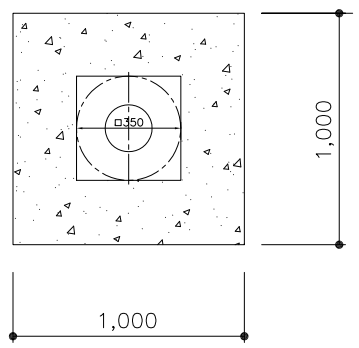

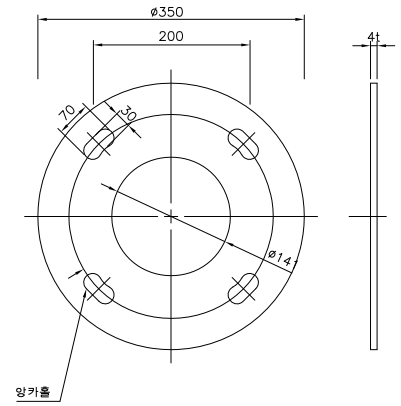

앙카 베이스판

MAT'L : SS400
Q'TY : 1EA/SET

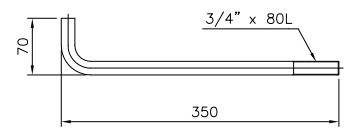

L형 앙카 볼트

MAT'L : SS4100
Q'TY : 4EA/SET

ASUNCION CITYHALL, REPUBLIC OF PARAGUAY KOICA	Project Name	The Establishment of Advanced Traffic Management System(ATMS) in Asuncion, Paraguay						Scale	NONE	Drawings Name	Pedestrian Pole Sub Structure
	Design Construction Company	TRACOM						CAD Name	ASU-CV-040		
			Revisions	Day	Reason	Drawed by	Checked by	Approved by	Sector	Engineering Works	Drawings Number	040

Traffic Signal Upside Structure

Detail View

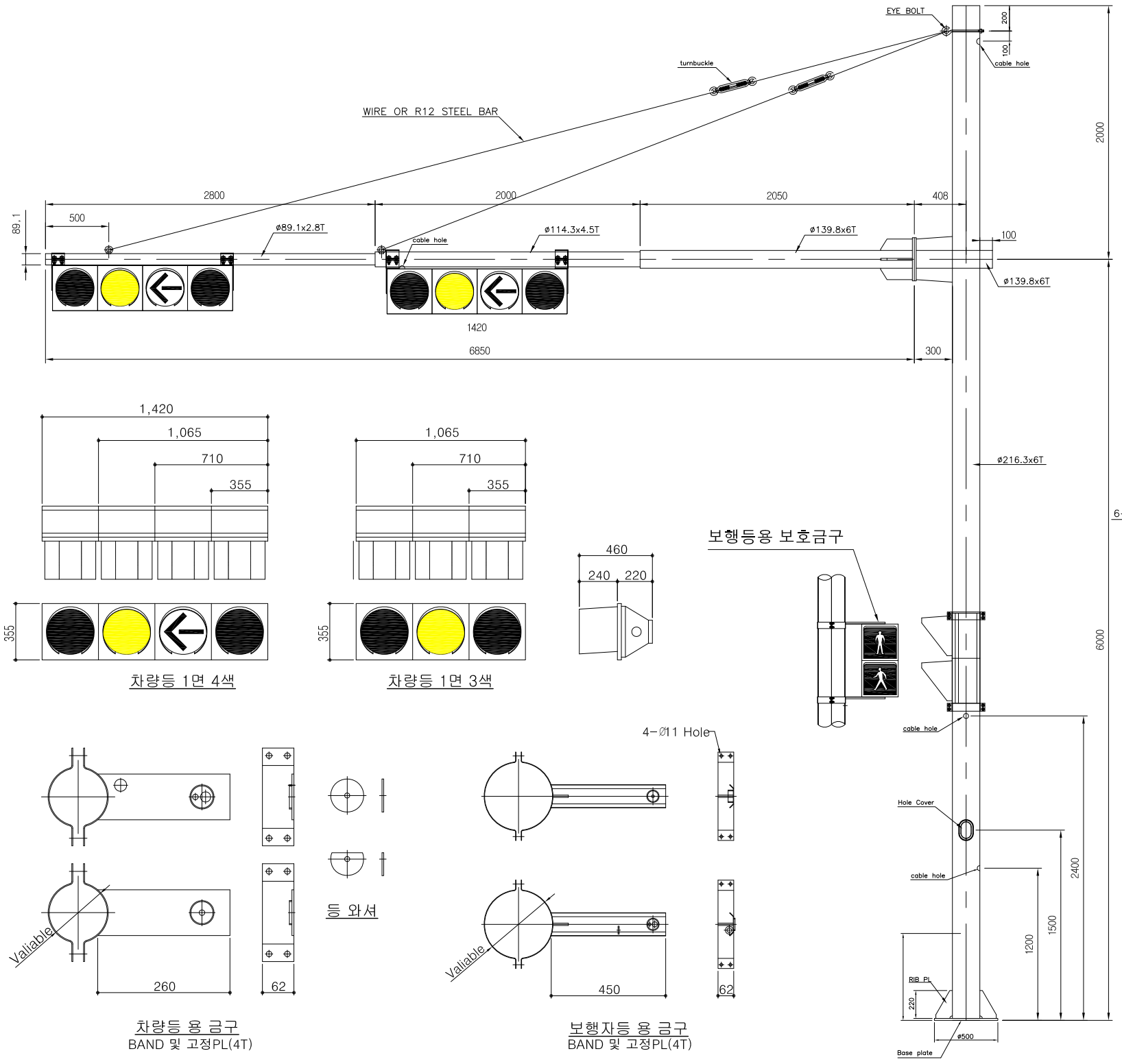

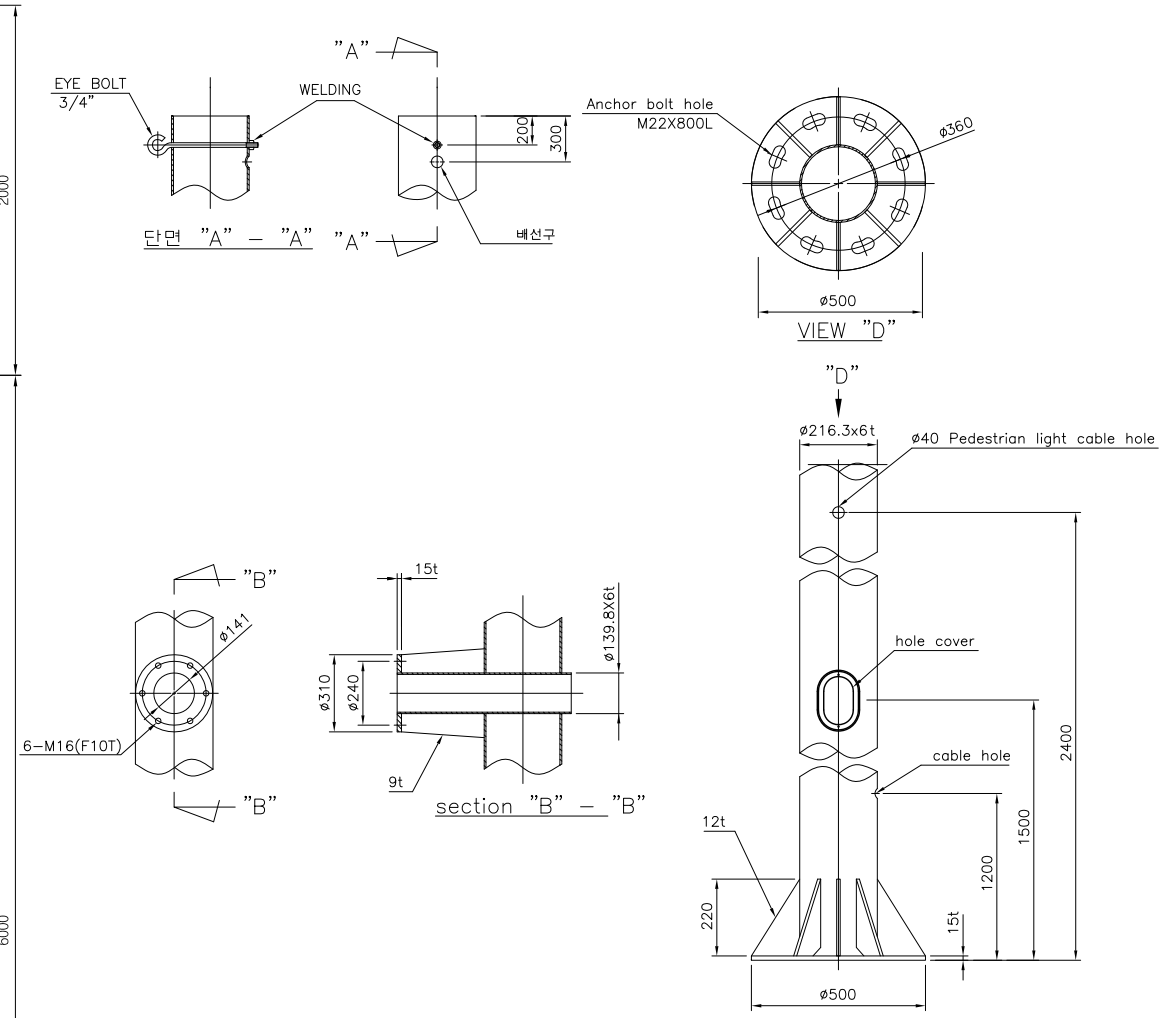

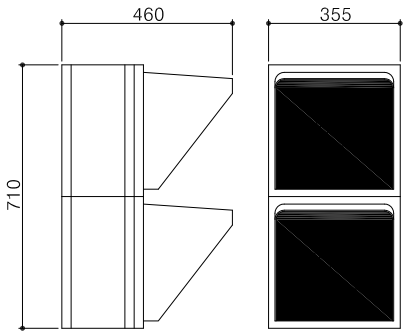

보행자 신호등

ASUNCION CITYHALL, REPUBLIC OF PARAGUAY KOICA	Project Name	The Establishment of Advanced Traffic Management System(ATMS) in Asuncion, Paraguay						Scale	NONE	Drawings Name	Traffic Signal Upside Structure
	Design Construction Company	TRACOM						CAD Name	ASU-CV-041		
			Revisions	Day	Reason	Drawed by	Checked by	Approved by	Sector	Engineering Works	Drawings Number	041

Traffic Signal Detail View

Detail View

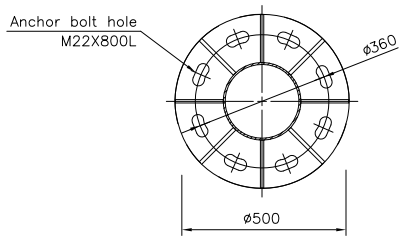

Base Plate
MAT'L : SS400
Q'TY : 1 EA/SET

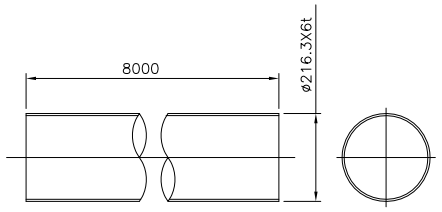

Pipe
MAT'L : KSD 3566
Q'TY : 1 EA/SET

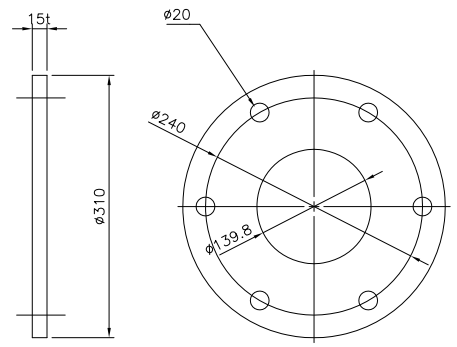

FLANGE PLATE
MAT'L : SS400
Q'TY : 1 EA/SET

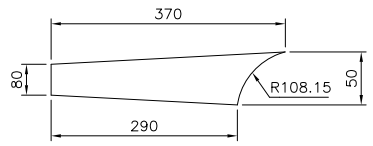

FLANGE RIB
MAT'L : SS400
Q'TY : 2 EA/SET

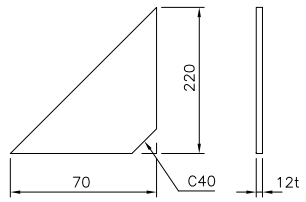

BASE RIb
MAT'L : SS400
Q'TY : 4 EA/SET

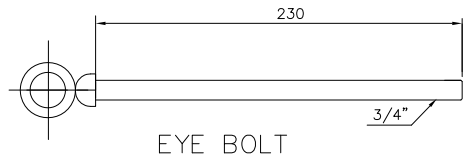

EYE BOLT
MAT'L : SS4100
Q'TY : 1 EA/SET

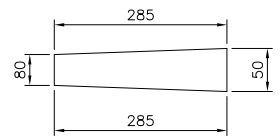

FLANGE RIB
MAT'L : SS400
Q'TY : 2 EA/SET

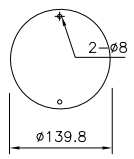

hole cover
MAT'L : STS 304
Q'TY : 1 EA/SET

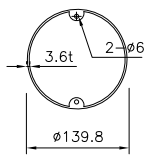

hole cover
BACK PLATE
MAT'L : SS400
Q'TY : 1 EA/SET

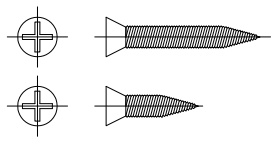

screw
MAT'L : STS 304
Q'TY : 2 EA/SET(6x16-1EA, 6x38-1EA)

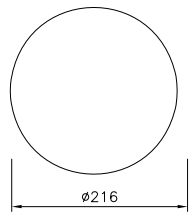

pole cap
MAT'L : SS400
Q'TY : 1 EA/SET

ASUNCION CITYHALL, REPUBLIC OF PARAGUAY KOICA	Project Name	The Establishment of Advanced Traffic Management System(ATMS) in Asuncion, Paraguay						Scale	NONE	Drawings Name	Traffic Signal Detail View
	Design Construction Company	TRACOM						CAD Name	ASU-CV-042		
			Revisions	Day	Reason	Drawed by	Checked by	Approved by	Sector	Engineering Works	Drawings Number	042

Traffic Signal Sub Structure

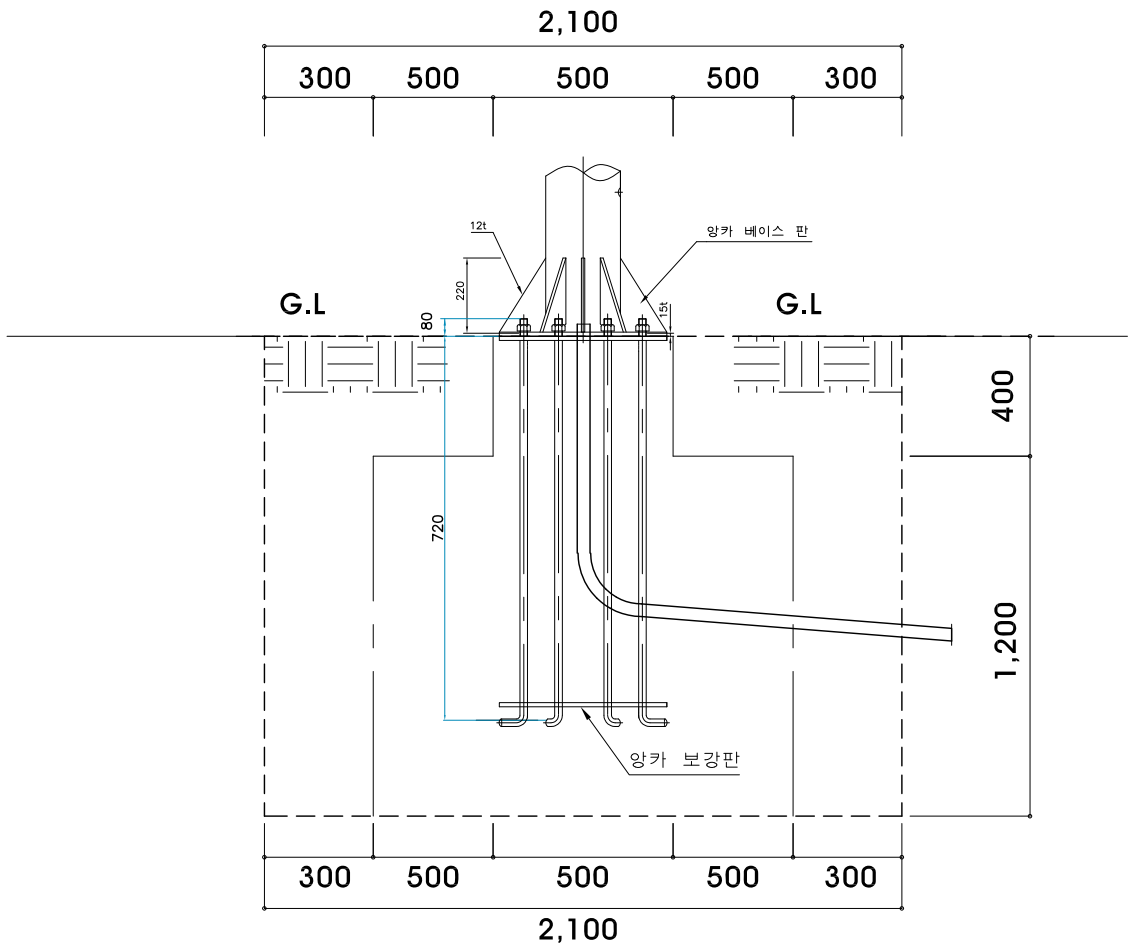

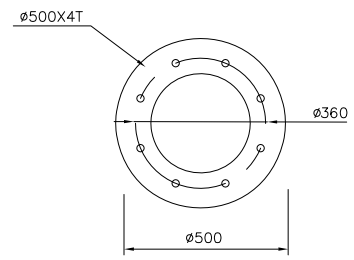

Anchor plate

MAT'L : SS400
Q'TY : 2EA/SET

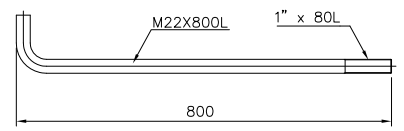

L-Anchor bolt

MAT'L : SS4100
Q'TY : 8 EA/SET

ASUNCION CITYHALL, REPUBLIC OF PARAGUAY KOICA	Project Name	The Establishment of Advanced Traffic Management System(ATMS) in Asuncion, Paraguay						Scale	NONE	Drawings Name	Traffic Signal Sub Structure
	Design Construction Company	TRACOM						CAD Name	ASU-CV-043		
			Revisions	Day	Reason	Drawed by	Checked by	Approved by	Sector	Engineering Works	Drawings Number	043

Traffic Signal Arm

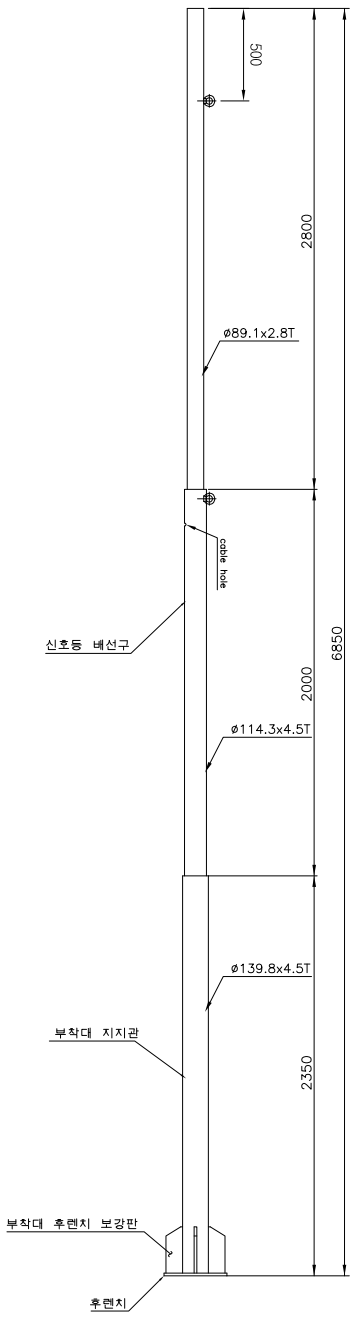

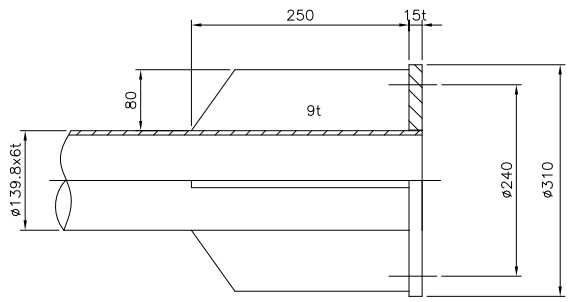

Arm & FLANGE RIB plate

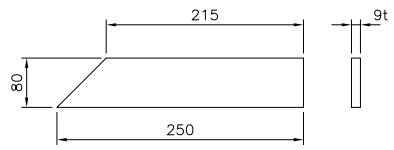

FLANGE RIB
MAT'L : SS400
Q'TY : 6 EA/SET

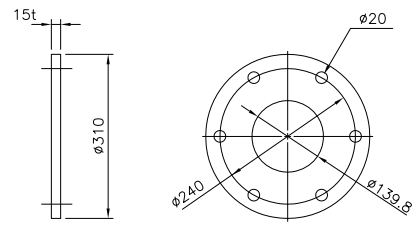

FLANGE plate
MAT'L : SS400
Q'TY : 1 EA/SET

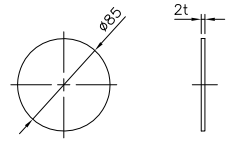

Arm cap "A" TYPE
MAT'L : SS400
Q'TY : 1 EA/SET

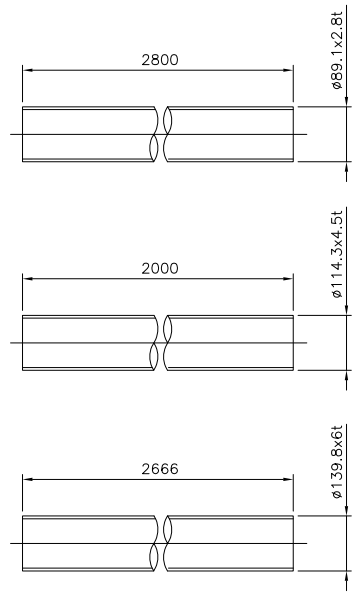

Arm
MAT'L : KSD 3566
Q'TY : 1 EA/SET

ASUNCION CITYHALL, REPUBLIC OF PARAGUAY KOICA	Project Name	The Establishment of Advanced Traffic Management System(ATMS) in Asuncion, Paraguay						Scale	NONE	Drawings Name	Traffic Signal Arm
	Design Construction Company	TRACOM						CAD Name	ASU-CV-044		
			Revisions	Day	Reason	Drawed by	Checked by	Approved by	Sector	Engineering Works	Drawings Number	044

Signal Controller Upside Structure

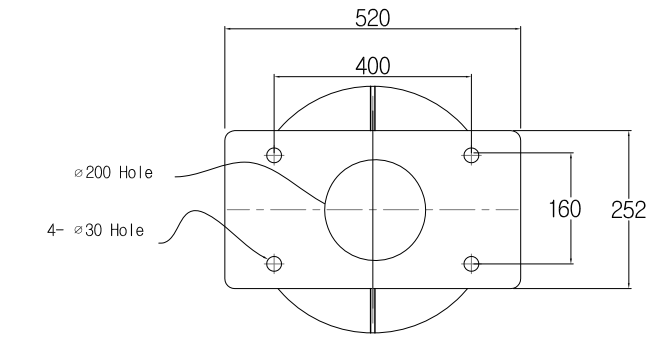

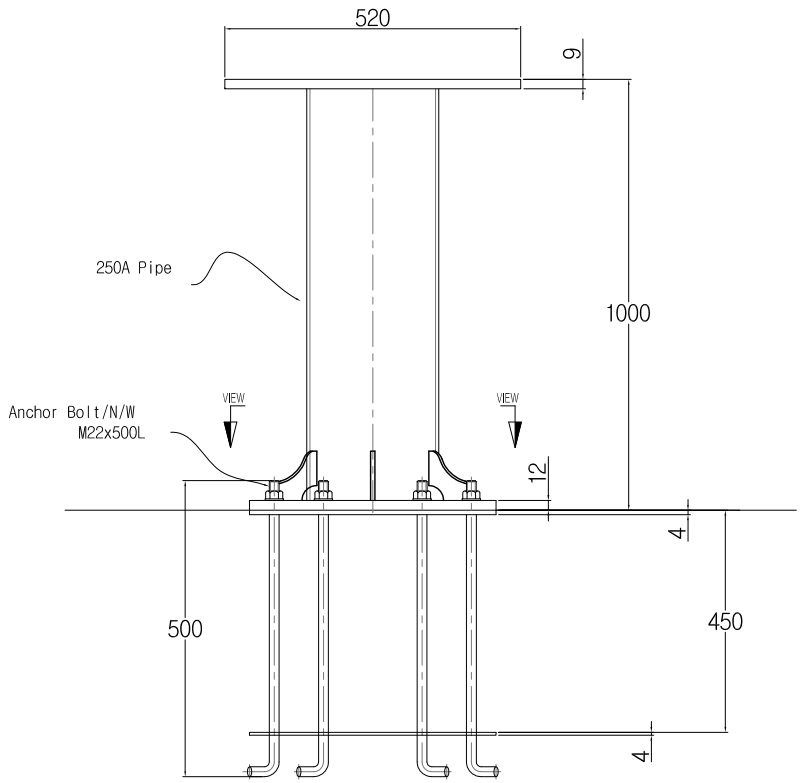

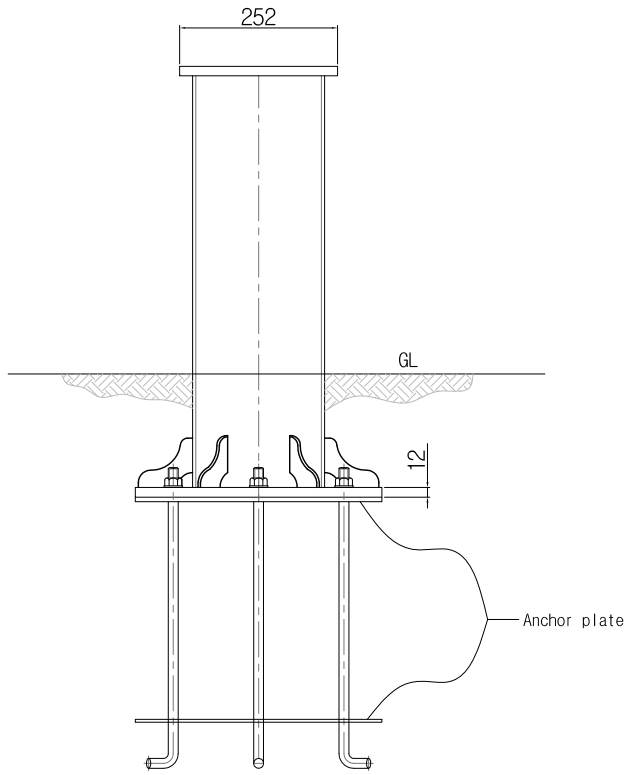

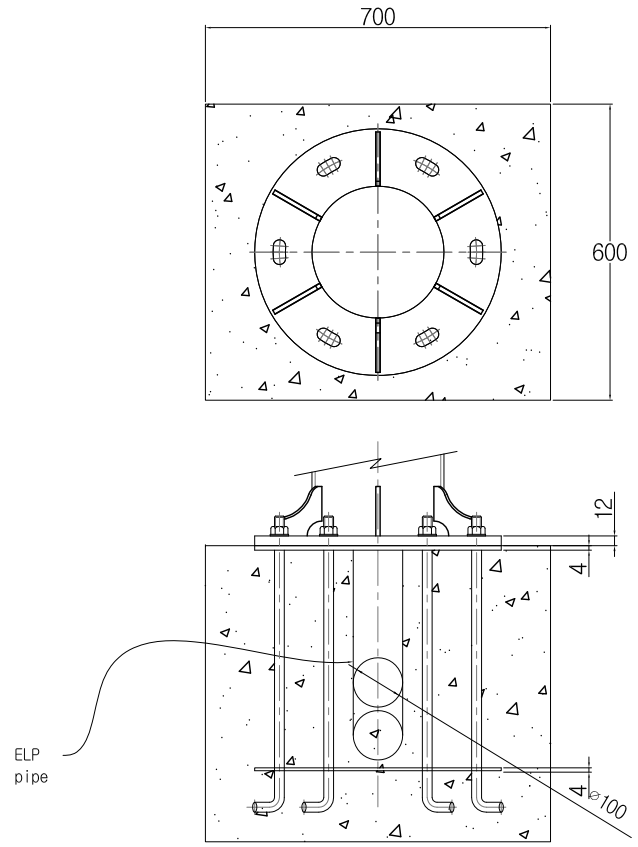

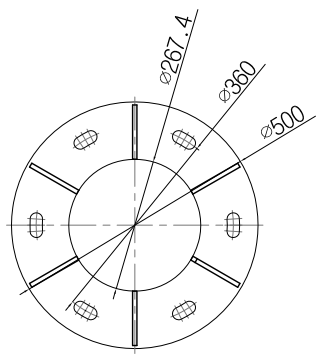

View A-A

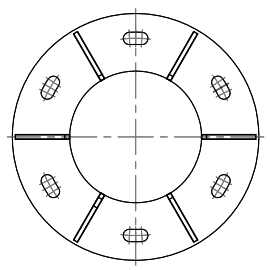

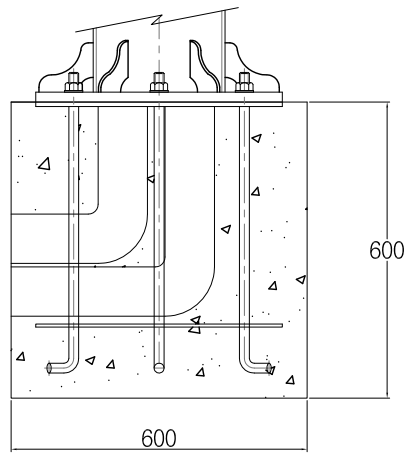

ASUNCION CITYHALL, REPUBLIC OF PARAGUAY KOICA	Project Name	The Establishment of Advanced Traffic Management System(ATMS) in Asuncion, Paraguay						Scale	NONE	Drawings Name	Signal Controller Upside Structure
	Design Construction Company	TRACOM						CAD Name	ASU-CV-045		
			Revisions	Day	Reason	Drawed by	Checked by	Approved by	Sector	Engineering Works	Drawings Number	045

TSCS Handhole (800x800)

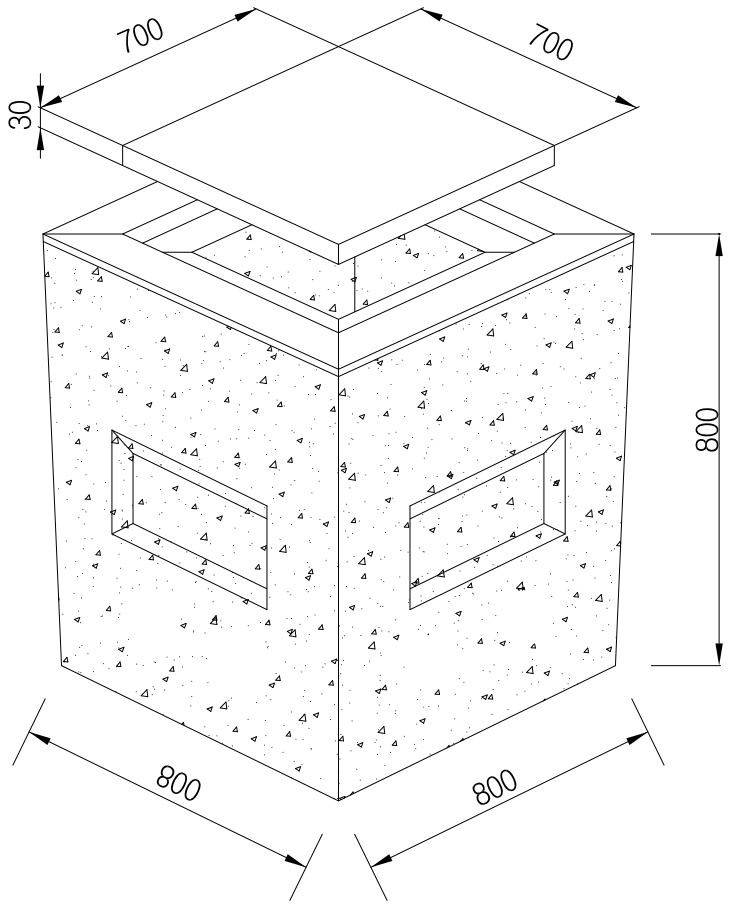

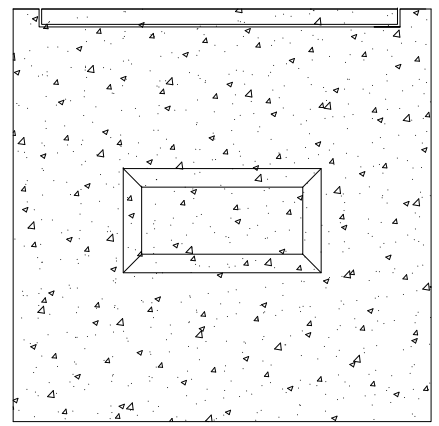

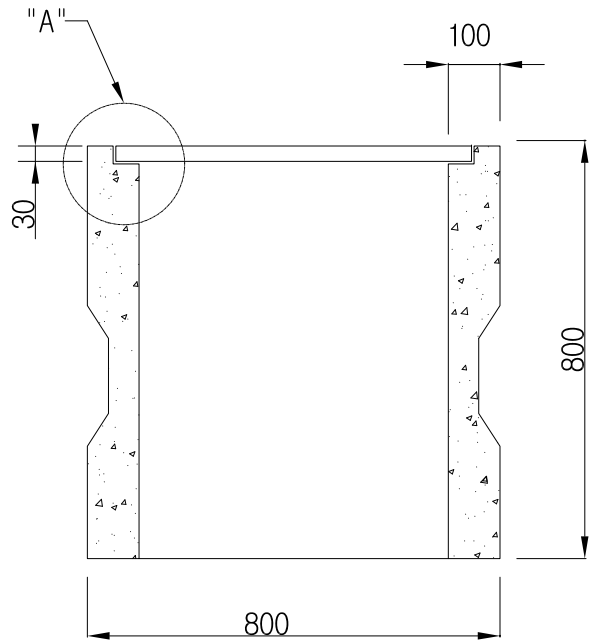

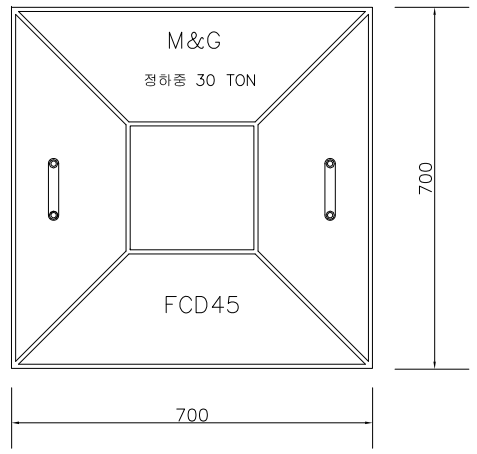

* 주 물 제 작
(재질 : 닥타일)

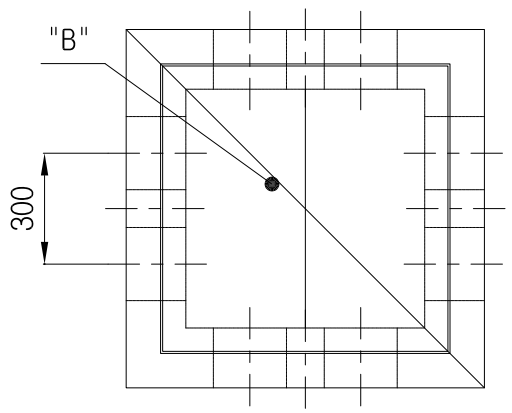

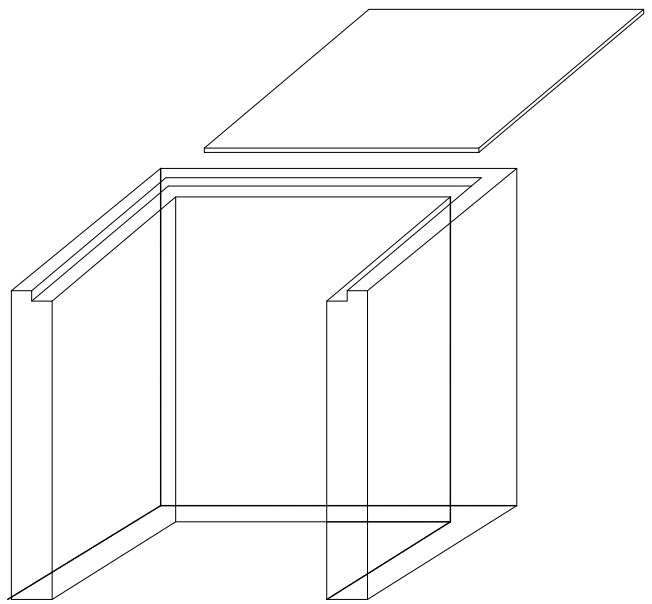

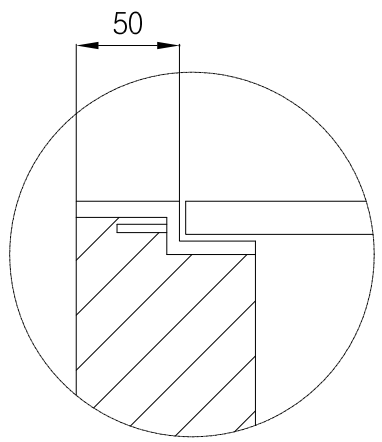

VIEW "A"

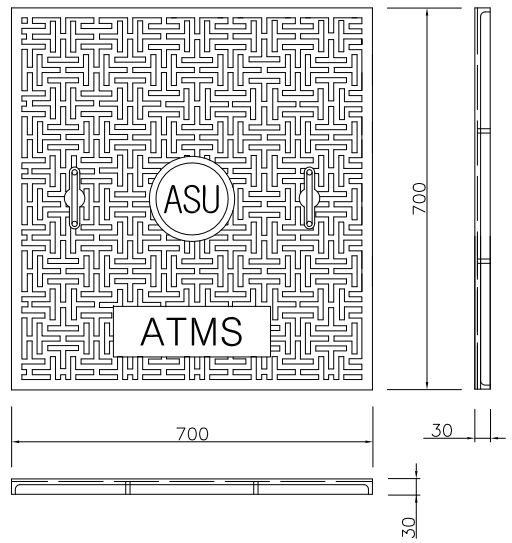

ASUNCION CITYHALL, REPUBLIC OF PARAGUAY KOICA	Project Name	The Establishment of Advanced Traffic Management System(ATMS) in Asuncion, Paraguay						Scale	NONE	Drawings Name	TSCS Handhole (800x800)
	Design Construction Company	TRACOM						CAD Name	ASU-CV-050		
			Revisions	Day	Reason	Drawed by	Checked by	Approved by	Sector	Engineering Works	Drawings Number	050

Signal Controller Cabinet Detail

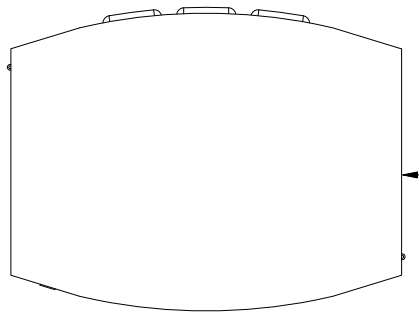

재질 : SPCC 제작(색상 청색)
도장 : 분체도장

재질 : SPCC제작(색상 회색)
도장 : 분체도장
65Kg

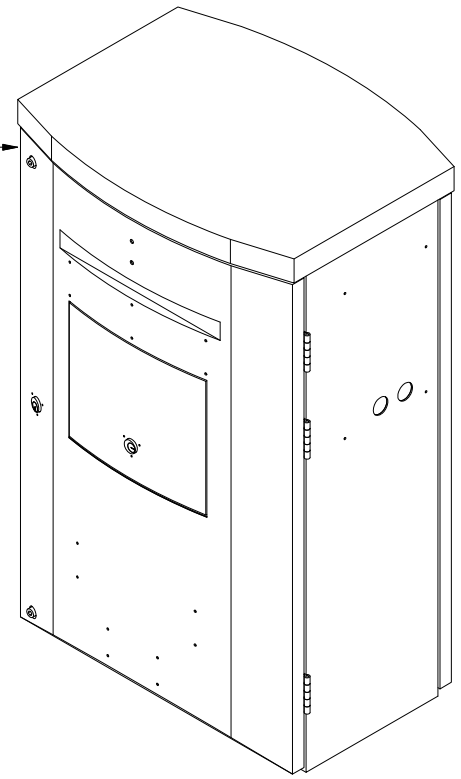

좌측면

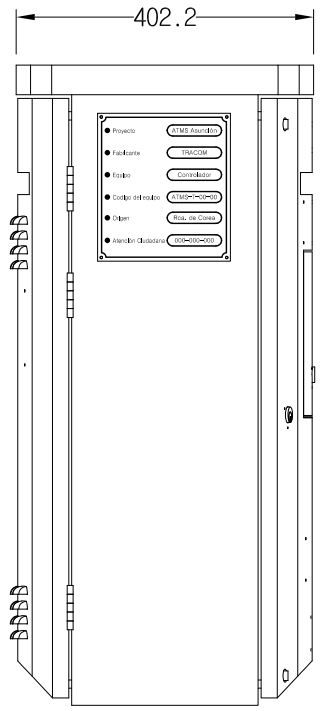

정 면

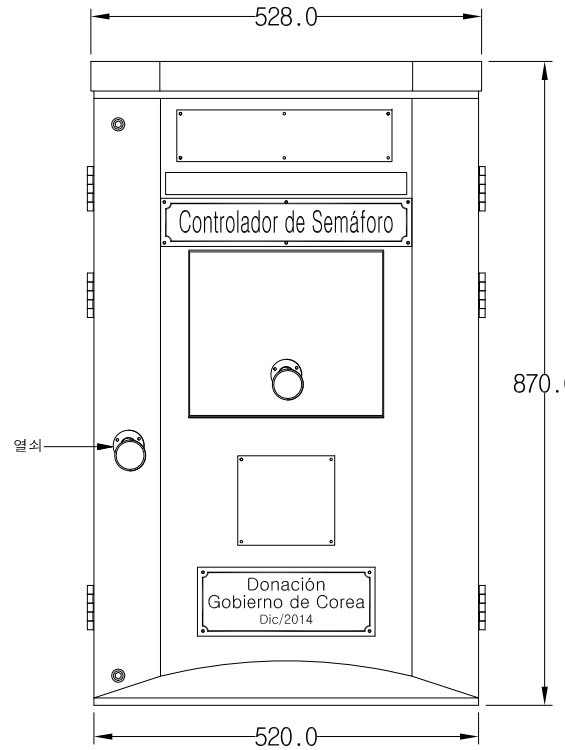

우측면

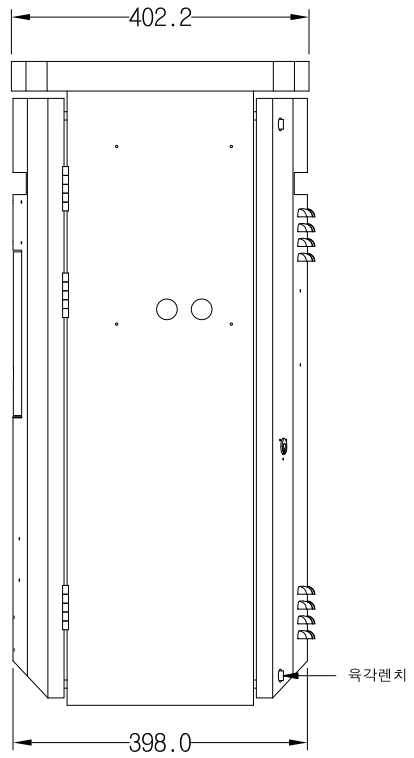

후 면

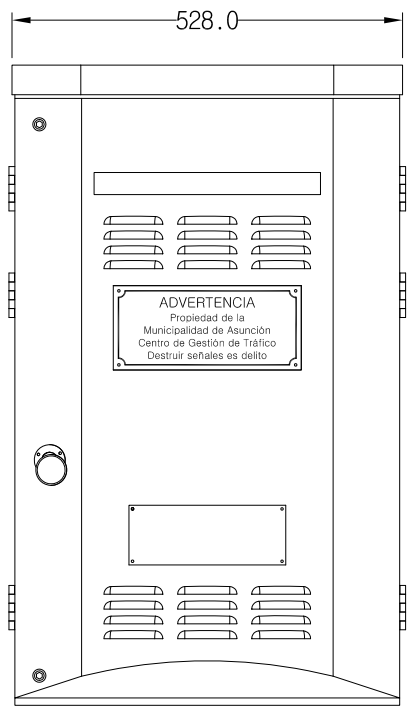

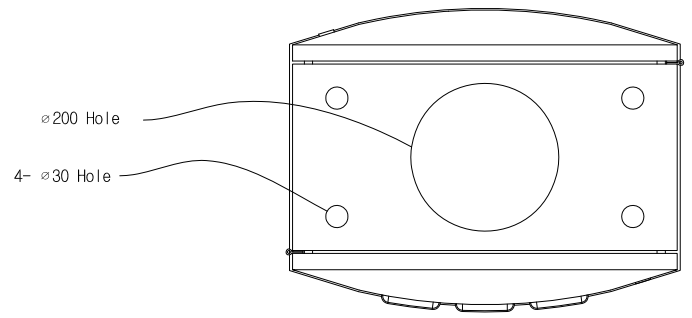

공사명	Proyecto	ATMS Asunción
제조회사명	Fabricante	TRACOM
장비명	Equipo	Controlador
관리번호	Codigo del equipo	ATMS T-00-00
원산지	Origen	Rca. de Corea
신고전화	Atención Ciudadana	000-000-000

ADVERTENCIA
Propiedad de la
Municipalidad de Asunción
Centro de Gestión de Tráfico
Destruir señales es delito.

*명판은 발주처 협의 후 변경될수 있음

ASUNCION CITYHALL, REPUBLIC OF PARAGUAY KOICA	Project Name	The Establishment of Advanced Traffic Management System(ATMS) in Asuncion, Paraguay						Scale	NONE	Drawings Name	Signal Controller Upside Structure
	Design Construction Company	TRACOM						CAD Name	ASU-CV-046		
			Revisions	Day	Reason	Drawed by	Checked by	Approved by	Sector	Engineering Works	Drawings Number	046

Signal Controller Mounted Inside

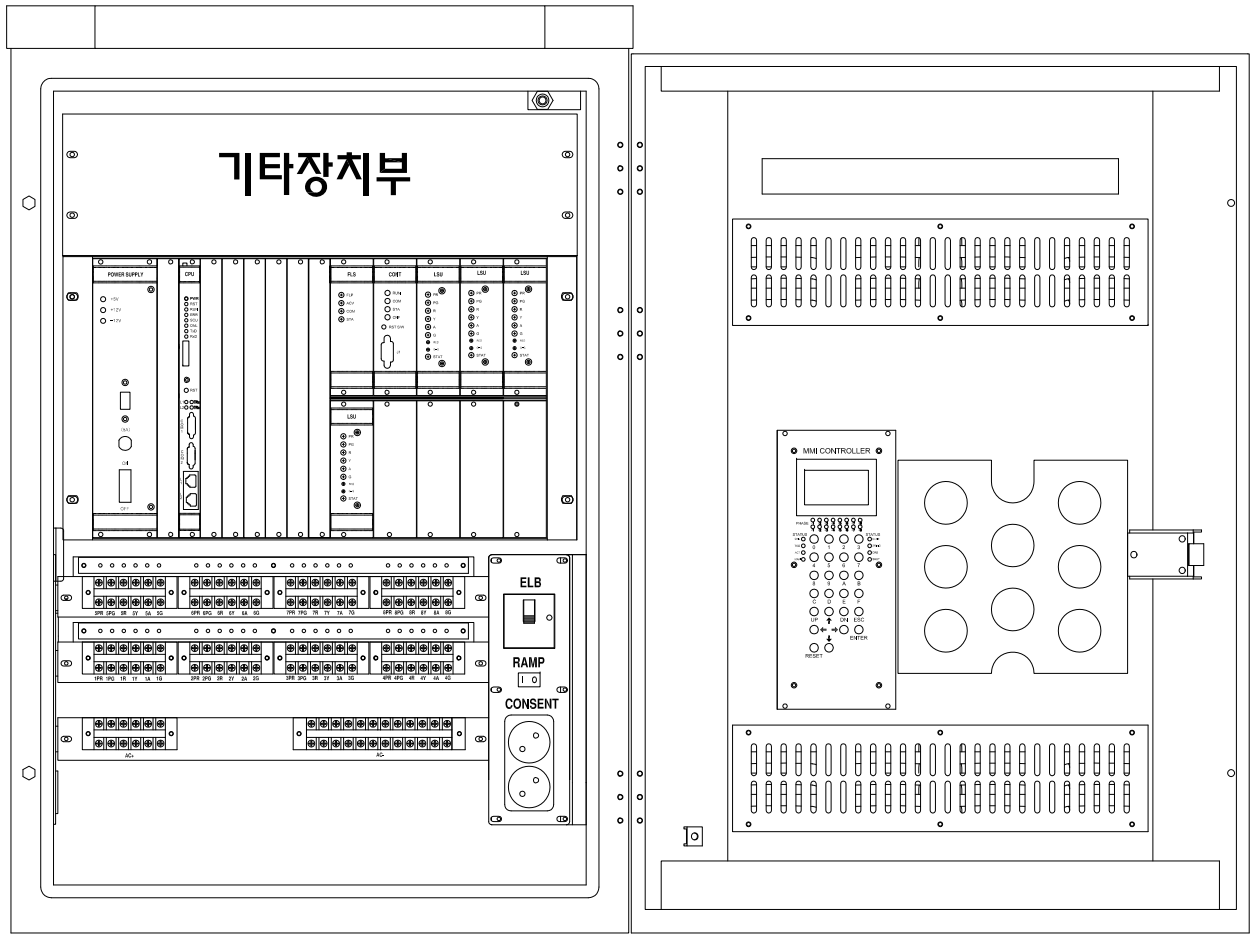

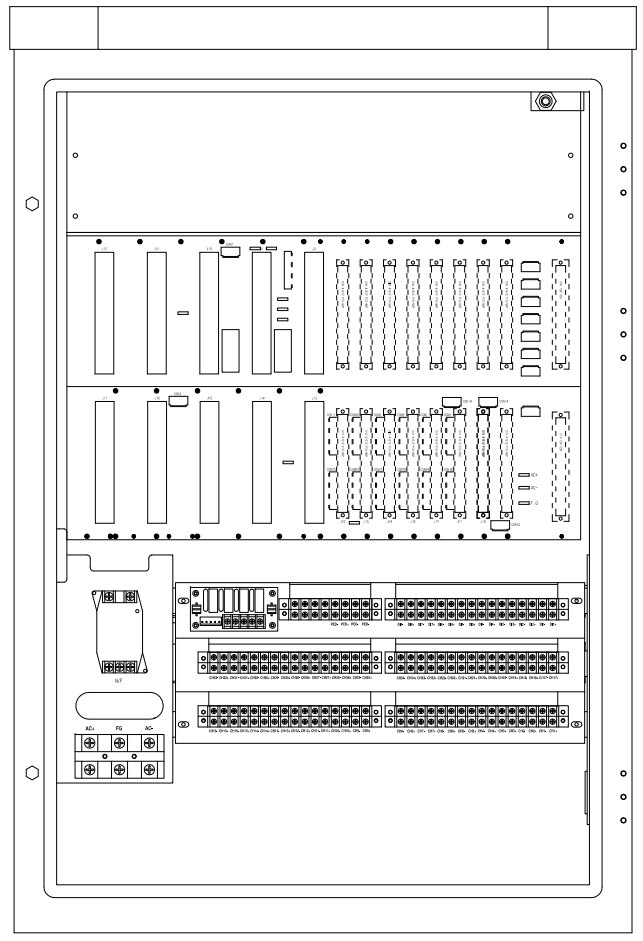

ASUNCION CITYHALL, REPUBLIC OF PARAGUAY KOICA	Project Name	The Establishment of Advanced Traffic Management System(ATMS) in Asuncion, Paraguay							Scale	NONE	Drawings Name	Signal Controller Upside Structure
									CAD Name	ASU-CV-047		
	Design Construction Company	TRACOM	Revisions	Day	Reason	Drawed by	Checked by	Approved by	Sector	Engineering Works	Drawings Number	047

Traffic Light Connection Diagram

Detail View

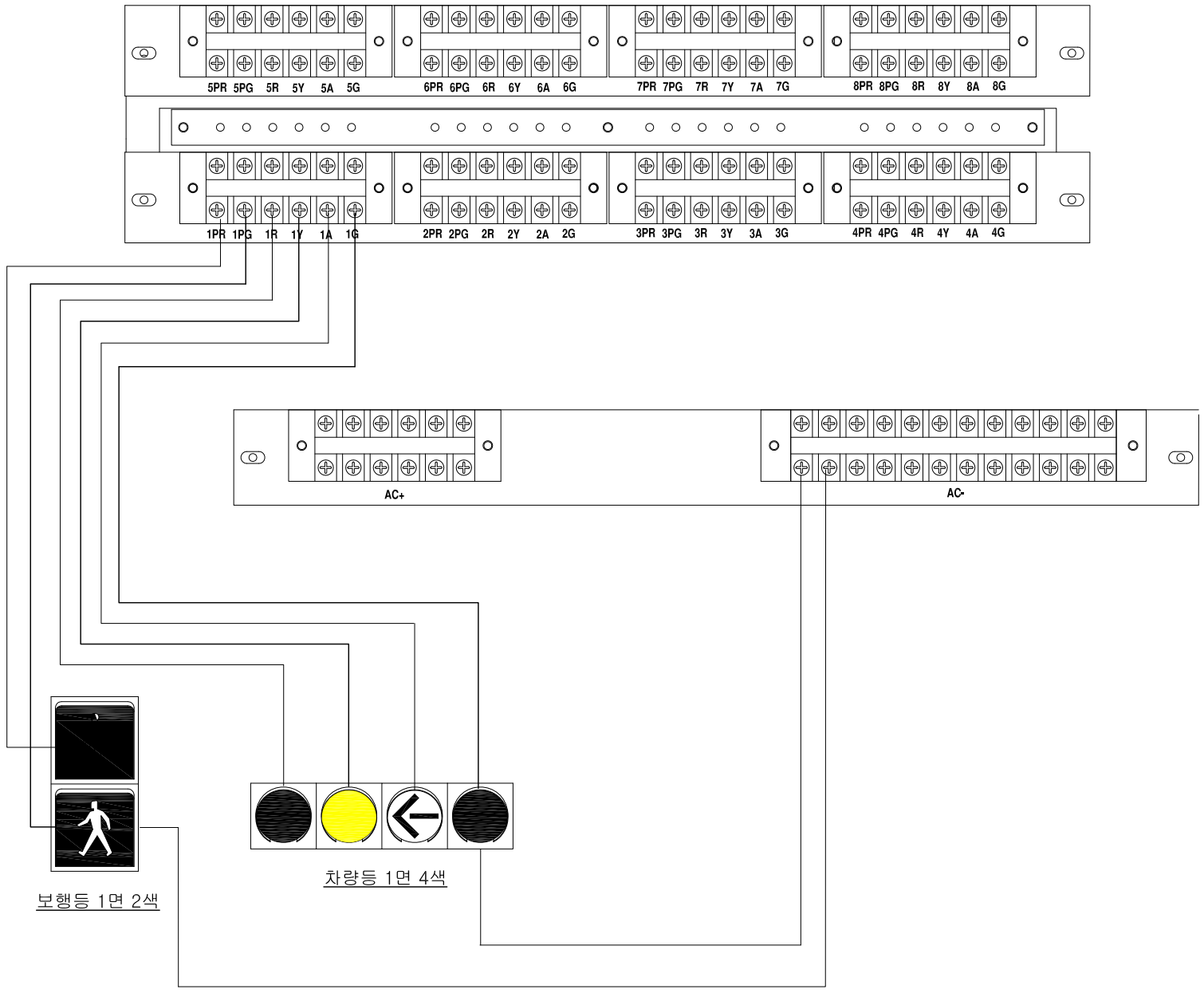

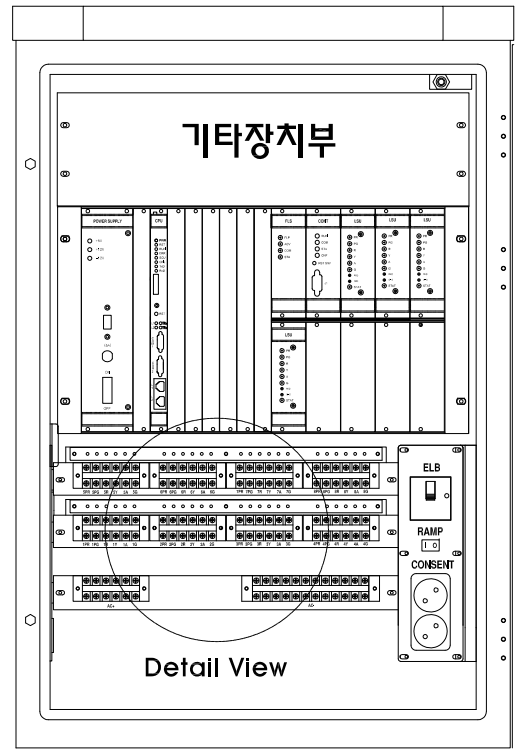

TSCS

ASUNCION CITYHALL, REPUBLIC OF PARAGUAY KOICA	Project Name	The Establishment of Advanced Traffic Management System(ATMS) in Asuncion, Paraguay							Scale	NONE	Drawings Name	Traffic Signal Upside Structure
									CAD Name	ASU-CV-048		
	Design Construction Company	TRACOM	Revisions	Day	Reason	Drawed by	Checked by	Approved by	Sector	Engineering Works	Drawings Number	048