Función Digital
INTEGRATED TECHNOLOGY

Asunción, 19 de diciembre de 2022

Señores
DIRECCIÓN NACIONAL DE ADUANAS
Coordinación Operativa de Control No Intrusivo
Lic. Humberto López

INFORME DE TRABAJO

Contrato N° 17/2022: "Servicios de Re – Potenciación y Actualización total de Escáners Rayos X Smiths Detection"

Por la presente se solicita el pago del 30 % correspondiente a la fase de embarque de los siguientes ítems, conforme lo establecido en el Pliego de Bases y Condiciones, Punto 7, Formas y condiciones de pago.

ÍTEM	DESCRIPCIÓN DEL BIEN	Porcentaje de facturación contra embarque de mercaderia.	IMPORTE
3	Fase 2 Acelerador de doble energía 6/4 MeV (Nuevo rendimiento y discriminación de alta energía) HCVMV2 850558	30%	3.764.329.200
5	Fase 2 Acelerador de doble energía 6/4 MeV (Nuevo rendimiento y discriminación de alta energía) HCVMV2 851505	30%	3.764.329.200
	TOTAL		**7.528.658.400**

Los equipos han sido adquiridos vía Smiths Detection / VAREX y han sido embarcados según Guía aérea N° HAWB No: S22BWIE14328
Adjuntamos. Packing List , Guia Aerea, Catalogo de Productos

.....
Javier Ferreira
Apoderado
FUNCIÓN DIGITAL PARAGUAY S.A.

.....
Lic. Humberto López
Coordinador Operativo Control No Intrusivo
Dirección Nacional de Aduanas

6

0000002 (2)

729|LAX|41271705

HAWB No: S22BWIE14328

Shipper's Name and Address	Shipper's Account Number
VAREX IMAGING, SIP 6811 SPENCER STREET LAS VEGAS NV 89119 US	VARIMALAS

Not Negotiable

House Air Waybill

Issued by JOHN S. CONNOR, INC.
799 CROMWELL PARK DRIVE
FMC#496/ CHB#3188, GLEN BURNIE, MD, 21061, UNITED

Copies 1, 2 and 3 of this Air Waybill are originals and have the same validity.

Consignee's Name and Address	Consignee's Account Number
FUNCION DIGITAL PARAGUAY S.A. RUC: 80078683-1 AV.MCAL LOPEZ 3794 ESQ CRUZ DEL CHACO ASUNCION PARAGUAY 1209 1402	

It is agreed that the goods described herein are accepted in apparent good order and condition (except as noted) for carriage SUBJECT TO THE CONDITIONS OF CONTRACT ON THE REVERSE HEREOF. ALL GOODS MAY BE CARRIED BY ANY OTHER MEANS INCLUDING ROAD OR ANY OTHER CARRIER UNLESS SPECIFIC CONTRARY INSTRUCTIONS ARE GIVEN HEREON BY THE SHIPPER, AND SHIPPER AGREES THAT THE SHIPMENT MAY BE CARRIED VIA INTERMEDIATE STOPPING PLACES WHICH THE CARRIER DEEMS APPROPRIATE. THE SHIPPER'S ATTENTION IS DRAWN TO THE NOTICE CONCERNING CARRIER'S LIMITATION OF LIABILITY. Shipper may increase such limitation of liability by declaring a higher value for carriage and paying a supplemental charge if required.

Issuing Carrier's Agent Name and City	Accounting Information
JOHN S CONNOR WASHINGTON DC	

Agent's IATA Code	Account No.
21-6 0732/0022	

Airport of Departure (Addr of First Carrier) and Requested Routing

LOS ANGELES

Reference Number	Optional Shipping Information	
CBWIE00051837	TERMS: DAP	

To	By First Carrier	Routing and Destination to	by	to	by	Currency	CHGS Code	WT/VAL PPD	WT/VAL COLL	Other PPD	Other COLL	Declared Value for Carriage	Declared Value for Customs
MIA	QT	ASU	QT			USD	PP	X		X		NVD	NCV

Airport of Destination	Requested Flight/Date		Amount of insurance	INSURANCE - If Carrier offers Insurance, and such Insurance is requested in accordance with the conditions thereof, indicate amount to be insured in figures in box marked "amount of insurance".
ASUNCION	QT 0001 / 20	QT 4087 / 25	XXX	

Handling Information CONTACT: MARTHA DUARTE /TEL: 595982259509 6 PCS AS ADDR
KNOWN SHIPPER UNSCREENED CARGO

ITN: X20221215387817

These commodities, technology or software were exported from the United States in accordance with the Export Administration Regulations. Ultimate Destination: Paraguay

Diversion contrary to U.S. law prohibited.

SCI

No. Of Pieces RCP	Gross Weight	kg lb	Rate Class / Commodity Item No.	Chargeable Weight	Rate / Charge	Total	Nature and Quantity of Goods (incl. Dimensions or Volume)
6	6641.0	K	Q	6641.0	4.96	32950.00	LINATRON M16 SN 6770 & SN 6771 AES POST 81343451600-520728100 12/16/2022 DIMS 53x43x64 IN x 2 DIMS 44x41x70 IN x 2 DIMS 70x45x61 IN x 2
6	6641.0					32950.00	

Prepaid	Weight Charge	Collect
32950.00		

Valuation Charge

Tax

Other Charges

A MESSENGER	35.00	A FUEL SURCHARGE	11289.70
A HANDLING/SERVICES	90.00		
A SCREENING SURCHARG	464.87		
A DELIVERY	1400.00		
A PICKUP	3150.00		

Total Other Charges Due Agent: 16429.57

Total Other Charges Due Carrier

Shipper certifies that the particulars on the face hereof are correct and that **insofar as any part of the consignment contains dangerous goods, such part is properly described by name and is in proper condition for carriage by air according to the applicable Dangerous Goods Regulations.**

JOHN S. CONNOR

JUDY SPROUSE DILL

Signature of Shipper or his Agent

Total Prepaid	Total Collect
49379.57	

AGENT FOR CARRIER:: TAMPA CARGO S.A.S

Currency Conversion Rates	CC. Charges in Dest. Currency	Executed on (date)	at (place)	Signature of Issuing Carrier or its Agent
		16-Dec-22	DULLES	JOHN S CONNOR

For Carrier's use only at Destination	Charges at Destination	Total Collect Charges

729-41271705

FUNCION DIGITAL PARAGUAY S.A.

Email

FROM:
Varex Imaging
Corporation
6811 SPENCER ST.
LAS VEGAS, NV
89119, USA

SHIP TO:
FUNCION DIGITAL PARAGUAY S.A.
Contact: MARTHA DUARTE /Tel: 595982259509
AV.MCAL LOPEZ 3794 ESQ CRUZ del CHACO
ROC 80078683-1
ASUNCION, PARAGUAY 1209 1402

Varex Imaging
ORDER NUMBER
321750779
MODEL NO Mi6
SERIAL NO H3M6770

Linatron Mi6 S/N H3M6770
Customer Ref: PO 4500279772
Varex S/O# 321750779
EXPORT LICENSE: D1300168

CONTAINER NO: N/A
SEAL NO: N/A
FORWARDER: N/A
VESSEL/AIRLINE: N/A
VOYAGE/FLIGHT: N/A
BOOKING NO: N/A
MAWB/HAWB NO: N/A
INLAND BILL OF LADING: N/A
CONTAINR SIZE: N/A
HAZ-MAT LOADED: NO

VAREX IMAGING

DATE: 12/19/2022
PAGE 1 OF 1
PREPARED BY: Rich Lawton

BOX NUMBER	DESCRIPTION	VOLUME		NET WT		GROSS WT		DIMENSIONS			
		CU. FT	*CU. M*	LBS	*KG*	LBS	*KG*	L	W	H	
1	X-RAY HEAD	84	2.40	4,846	*2,198*	5,155	*2,338*	53	43	64	IN
								135	*109*	*163*	*CM*
2	MODULATOR	73	2.08	755	*342*	1,025	*465*	44	41	70	IN
								112	*104*	*178*	*CM*
3	CHILLER/HC44968 & CONSOLE	111	3.16	915	*415*	1,320	*599*	70	45	61	IN
								178	*114*	*155*	*CM*
											IN
											CM
											IN
											CM
TOTAL 3	TOTALS	269	8	6516	2956	7500	3402				

FUNCION DIGITAL PARAGUAY S.A.

00000003

FROM:
Varex Imaging Corporation
6811 SPENCER ST.
LAS VEGAS, NV
89119, USA

SHIP TO:
FUNCION DIGITAL PARAGUAY S.A.
Contact: MARTHA DUARTE /Tel: 595982259509
AV.MCAL LOPEZ 3794 ESQ CRUZ del CHACO
ROC 80078683-1
ASUNCION, PARAGUAY 1209 1402

Varex Imaging ORDER NUMBER 321750787
MODEL NO Mi6
SERIAL NO H3M6771

Linatron Mi6 S/N H3M6771
Customer Ref: PO 4500279772
Varex S/O# 321750787
EXPORT LICENSE: D1300168

CONTAINER NO: N/A
SEAL NO: N/A
FORWARDER: N/A
VESSEL/AIRLINE: N/A
VOYAGE/FLIGHT: N/A
BOOKING NO: N/A
MAWB/HAWB NO: N/A
INLAND BILL OF LADING: N/A
CONTAINR SIZE: N/A
HAZ-MAT LOADED: NO

VAREX IMAGING

DATE: 12/19/2022
PAGE 1 OF 1
PREPARED BY: Rich Lawton

BOX NUMBER	DESCRIPTION	VOLUME		NET WT		GROSS WT		DIMENSIONS			
		CU. FT	*CU. M*	LBS	*KG*	LBS	*KG*	L	W	H	
1	X-RAY HEAD	84	2.40	4,851	*2,200*	5,160	*2,341*	53	43	64	IN
								135	*109*	*163*	*CM*
2	MODULATOR	73	2.08	760	*345*	1,030	*467*	44	41	70	IN
								112	*104*	*178*	*CM*
3	CHILLER/HC44967 & CONSOLE	111	3.16	945	*429*	1,350	*612*	70	45	61	IN
								178	*114*	*155*	*CM*
											IN
											CM
											IN
											CM
TOTAL 3	TOTALS	269	8	6556	2974	7540	3420				

FUNCION DIGITAL PARAGUAY S.A.

4000000

8

0000005 9 (49)

Linatron® Mi

Modular Interlaced High-energy X-Ray Source

VAREX® INDUSTRIAL

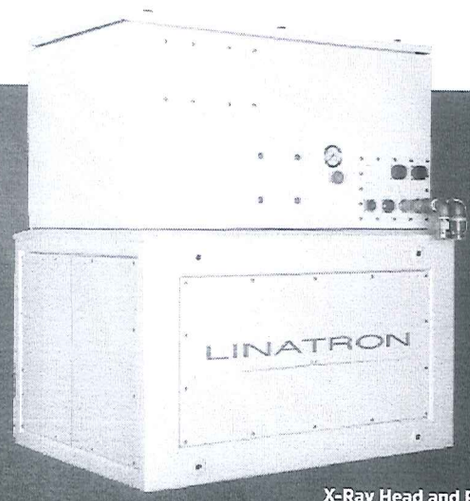

X-Ray Head and RF Unit

The Linatron®-Mi™ is a modular interlaced high-energy X-ray source with pulse to pulse energy switching capability, especially designed for cargo screening and security applications. By rapidly alternating between two distinct energy levels, systems incorporating the Mi X-ray source can be designed to discriminate between materials based on their density characteristics.

Figure 1 illustrates the automated switching between two energy levels.

Figure 1

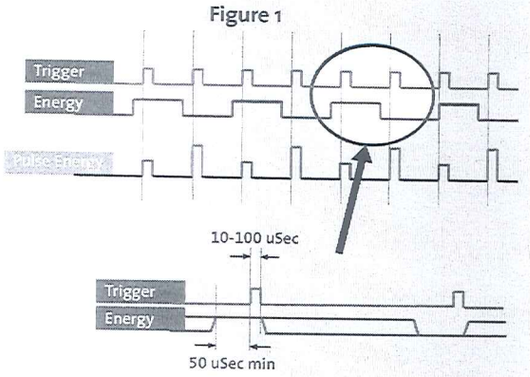

1.0 Standard Equipment and Services

1.1 Control Console

The standard control console is a touch screen display system. Includes 2 key safety and remote interlock.

1.2 X-ray Head/RF Unit

1.3 Modulator/Power Distribution Cabinet/External Signal Interface.

1.4 Temperature Control Unit (TCU)

The TCU is used to keep the system components at a nominal 30°C (86°F).

1.5 Spare Parts Kits

- Compulsory
- Standard
- Extended

1.6 Interconnecting cables include with lengths up to 100 meters (330 ft.).
Interconnecting Hoses included:
with lengths up to 91 meters (300 ft) for indoor application with lengths up to 45 meters (150 ft) for outdoor application.

1.7 Manuals

Operator Manuals are included in English.

1.8 Installation Supervision and Start-up Assistance

1.9 Varex's Standard Warranty

Copyright © 2020, Varex Imaging Corporation. All Rights Reserved.

FUNCIÓN DIGITAL PARAGUAY S.A.

Linatron Mi

Modular Interlaced High-energy X-Ray Source

VAREX INDUSTRIAL

2.0 X-ray Beam Characteristics

2.1. Dose Rate - measured 1 meter from target in central axis of a 10-cm x 10-cm field. Listed in Gy/min-meter. (See Table 1)

2.2. Energy – measured with Half Value Layer (HVL) method in steel and listed in inches of steel as well as nominal energy in MV. (See Table 1)

2.3. Focal Spot Size – measured using Full Width Half Max method and does not exceed 2.0 mm.

*Smaller spot size options are available for Mi9 at reduced dose output. See Section 4.5

2.4. Field Flatness – measured at 1 meter from target at ±7.5° off the central axis. Listed as percent of the central axis dose rate. See Table 1.

Table 1 - X-Ray Beam Characteristics

Model	Nominal Energy (MV)	Half Value Layer (Inches of Steel)	Flatness (% @ ± 7.5°)	Max. Dose Rate (Gy/Min)
Mi6 Low Dose	4.0	1.00"	≥69.0	0.4
	6.0	1.10"	>62.0	1.0
Mi6	4.0	1.00"	≥69.0	2.5
	6.0	1.10"	>62.0	8.0
Mi9	6.0	1.10"	>62.0	10.0
	9.0	1.18"	>55.0	30.0

*Dose rate will be affected by customer collimation and flattening filter, if applicable

2.5. Field Size – field collimation is custom for each system. See Table 3 for options.

2.6. Field Symmetry - beam asymmetry is measured at 1 meter from target and does not exceed 5% (for symmetric collimation options).

2.7. Leakage Radiation – measured along the horizontal plane at 1 meter from the beam centerline at angles > 60° outside of the primary beam. Listed as a fraction of the primary beam central axis dose rate; (excluding primary beam scatter). Leakage radiation is dependent upon X-ray Head shielding package, see options in section 4.2.

2.8 Energy Switching Rate

Energy is switched pulse to pulse when controlled through the control console. Pulse sequencing can be defined for different combinations through customer interface (see Table 2).

Table 2

Model	Pulse Range (pps)
Low	50 - 400
High	50 - 350
Interlaced	50 - 400

3.0 Customer Facility Requirements

3.1 Electrical Requirements

The Linatron M operates from a single 15 kVA power source. Two voltage ranges are available.

- 208 VAC ±10%, 3-phase, Delta (4-wire), 50 or 60 Hz
- 400 VAC ±10%, 3-phase, Wye, (5 wire), 50 or 60 Hz

3.1.1 Temperature Control Unit (TCU)

The TCU is connected to a separate 7kVA power source. Models are available that can operate on a line voltage of 220 VAC and 400 VAC, at 50Hz; or220 VAC and 480 VAC, at 60Hz. If the in-line heater package is required, power requirement is increased to 20kVA.

3.2 Operating Environment

3.2.1 Modulator / Console

The temperature range for console and modulator is 4/40°C (39/104°F), with 90% maximum relative humidity (non-condensing). Indoor use only.

3.2.2 RF Unit / X-ray Head

The temperature range for X-ray head / RF unit is -40/52°C (-40/125°F), with condensing humidity.

3.2.3 Temperature Control Unit (TCU)

TCU temperature range is -40/+55°C (-40/131°F), with condensing humidity.

Copyright © 2020, Varex Imaging Corporation. All Rights Reserved.

FUNCIÓN DIGITAL PARAGUAY S.A.

(47) 11
0000007

Linatron Mi

Modular Interlaced High-energy X-Ray Source

4.0 Optional Equipment

4.1 Custom Beam Collimation

Nonstandard field sizes are available per customer's requirements.

4.1.1 Internal Collimator Options

Table 3 – Field Collimator Options			
Cone	Min	4°	Note Symmetric
	Max*	67° (39°)	
	Standard	15°, 30°	
Slit	Min	±2°	Note Vertical Angles may be asymmetrical
	Max	+35°/-32°	
	Width	2.5mm-6mm	
Square/ Fan	Min	±2	Note All Angles may be asymmetrical
	Max*	±39° (±19.5°)	
	Standard	22.5°, 24°	
*Ultra-Low Leakage Package limits collimator angles to those shown in parenthesis			

4.2 Lower Leakage Options listed in Table 4

Table 4 - Leakage Radiation Shielding Options			
Model	Shielding Option	Leakage (Fraction)	RFU / X-Ray Head Weight (lbs.)
Mi6	Low Leakage	1.0×10^{-3}	1800 ± 25
	Super Low Leakage	2.0×10^{-5}	2145 ± 25
	Ultra-Low Leakage*	2.5×10^{-6}	5211 ± 25
Mi9	Low Leakage	1.0×10^{-3}	2039 ± 25
	Super Low Leakage	2.0×10^{-5}	2339 ± 25
*Ultra-Low Leakage Package not available with Laser or External Collimator Options			

4.3 Power Options

Recommended for installations where line power short-term fluctuations are greater than +/-5%. A step-up or step-down transformer can also be ordered to adapt a non-standard voltage source for use with the Linatron or TCU. The regulator is CE and UL approved.

4.4 Smart Remote Customer Interface

The Linatron uses industry standard Modbus Client/ Server Protocol, configurable as RTU via serial interface or TCP via Ethernet. The customer can use a personal computer or utilize a primary control system to control/monitor the Linatron. The signals available include control, fault monitoring and analog input signals.

4.5 Small Focal Spot

1.0 to 1.5mm available for the Mi-9 only.
* Maximum dose rate may be reduced.
Less than 1.0mm available at further dose reduction.

Quality

Varex Imaging Corporation, Las Vegas is an ISO 9001 registered facility.

bsi. ISO 9001 Quality Management
FM 80701

Regulatory Compliance
CE Marking

All Mi-Series Linatron models have been tested and meet all Varex Imaging Quality specifications and are in conformity with following standards for safety and EMC requirements.

Safety

IEC / EN 61010-1 Safety requirements for electrical equipment for measurement, control, and laboratory use
ANSI / UL / CSA C22.2 No. 61010-1

Electromagnetic Compatibility (EMC)

- FCC CFR Title 47 Part 18 Rules Conducted & Radiated Emissions
- CISPR 11 / EN 55011
  Conducted & Radiated Emissions

European Union Directives

2014/35/EU Low Voltage Directive
2014/30/EU EMC Directive
2011/65/EU Reduction of Hazardous Substances (RoHS)

Copyright © 2020, Varex Imaging Corporation. All Rights Reserved.

FUNCIÓN DIGITAL PARAGUAY S.A.

Linatron Mi

Modular Interlaced High-energy X-Ray Source

Mi PHYSICAL CONFIGURATIONS

Control Console
(9 lbs)

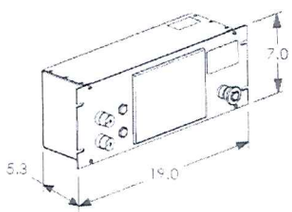

Modulator
735 ± 25 lbs

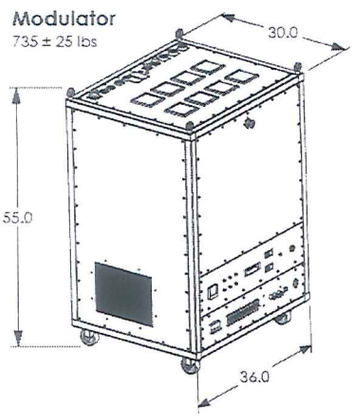

Temperature Control Unit (TCU)
(567 lbs. max)

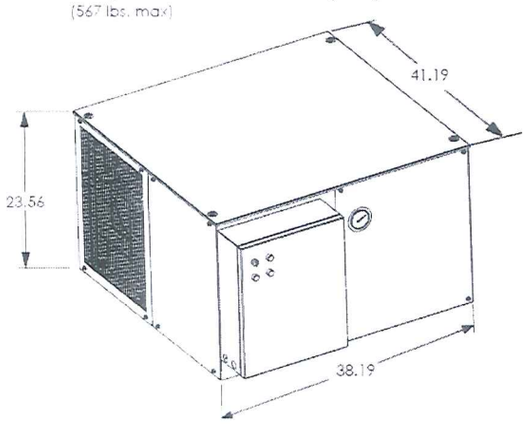

Mi-6 LOW LEAKAGE			
PARAMETERS	X	Y	Z
CENTER OF GRAVITY	17.5±.5	10.5±.5	13.8±.5
FOCAL POINT	9.6	9.5	9.3
TOTAL WEIGHT: 1800 ± 25 LBS			

Mi-6 SUPER LOW LEAKAGE			
PARAMETERS	X	Y	Z
CENTER OF GRAVITY	17.5±.5	10.5±.5	13.8±.5
FOCAL POINT	9.6	9.5	9.3
TOTAL WEIGHT: 2145 ± 25 LBS			

Mi-6 ULTRA LOW LEAKAGE			
PARAMETERS	X	Y	Z
CENTER OF GRAVITY	19.0±.5	16.0±.5	14.0±.5
FOCAL POINT	9.8	15.6	9.5
TOTAL WEIGHT: 5211 ± 25 LBS			

Mi-9 LOW LEAKAGE			
PARAMETERS	X	Y	Z
CENTER OF GRAVITY	24.8	13.0	13.5
FOCAL POINT	9.6	14.0	9.5
TOTAL WEIGHT 2039 ± 25 LBS			

Mi-9 SUPER LOW LEAKAGE			
PARAMETERS	X	Y	Z
CENTER OF GRAVITY	24.8	13.3	13.5
FOCAL POINT	9.6	14.0	9.5
TOTAL WEIGHT: 2339 ± 25 LBS			

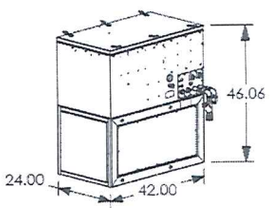

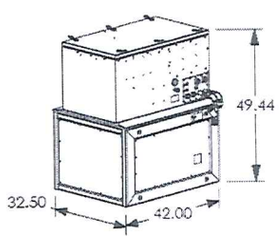

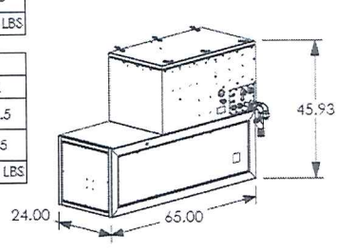

Varex Imaging and Linatron are registered trademarks, and Linatron Mi is a trademark of Varex Imaging Corporation.
All other trademarks are the property of their respective owners.

Varex Imaging Corporation

USA

HEADQUARTERS
Salt Lake City, UT
P: +1-801-972-5000

Las Vegas, NV
Tel: 1-800-432-4422
Email: industrial.support@vareximaging.com
Website: https://www.vareximaging.com/solutions/security-industrial-solutions

2020 Varex Imaging Corporation. All Rights reserved. Production of any of the material contained herein in any format or media without the express written permission of Varex Imaging Corporation is prohibited.

Copyright © 2020, Varex Imaging Corporation. All Rights Reserved.

100071885-01 Rev A 03/2020

FUNCIÓN DIGITAL PARAGUAY S.A.