Table 3: Lane Definition Data, Part 1 of 3

Lane	LaneFrom	LayoutLine	Station	LaneType	Width	Offset	Radius	LoadGroup
			m		m	m	m	
Carril Izquierdo	Layout Line	EJE VIAL PPAL.	120.		3.5	-1.75	0.	Default

Table 3: CARRIL - Lane Definition Data, Part 2 of 3

Table 3: Lane Definition Data, Part 2 of 3

Lane	DiscAlong	DiscAcross	DiscSpan	DiscLane	DiscLaneFac	LeftType	RightType	Color
	m	m						
Carril Derecho	3.	2.	No	Yes	10.	Interior	Exterior	Magenta
Carril Derecho								
Carril Izquierdo	3.	2.	No	Yes	10.	Exterior	Interior	Green
Carril Izquierdo								

Table 3: CARRIL - Lane Definition Data, Part 3 of 3

Table 3: Lane Definition Data, Part 3 of 3

Lane	Notes
Carril Derecho	
Carril Derecho	
Carril Izquierdo	
Carril Izquierdo	

1.3. Spans

Table 4: Bridge Object Definitions 03 - Spans 1 - General

Table 4: Bridge Object Definitions 03 - Spans 1 - General

BridgeObj	SpanName	BridgeSect	Variation
PUENTE 120m	Span 1	TABLERO 30	No
PUENTE 120m	Span 2	TABLERO 30	No
PUENTE 120m	Span 3	TABLERO 30	No
PUENTE 120m	Span 4	TABLERO 30	No

Ing. Antonio N. Pangrazio
Representante Legal

Ing. JORGE REGUEIRO
SOTEC S.A.

Ing. José María Molinas Rojas
Reg. MOPC 2831

1.4. Bridge Sections

Table 5: Bridge Section Definitions 09 - PCC I Girders 1 - General, Part 1 of 4

Table 5: Bridge Section Definitions 09 - PCC I Girders 1 - General, Part 1 of 4

Section	Material	NumIntGird	TotalWidth	GirdLayout	DiffSpacing	Diff	DiffSection
			m				
TABLERO 30	HA-25	2	10.	Along Layout Line	No	No	No

Table 5: Bridge Section Definitions 09 - PCC I Girders 1 - General, Part 2 of 4

Table 5: Bridge Section Definitions 09 - PCC I Girders 1 - General, Part 2 of 4

Section	TopSlabThk	HSame	GirdSecSame	LOLength	LOFillDist	LOOuterThk	ROLength	ROFillDist
	m	m		m	m	m	m	m
TABLERO 30	0.2	0.	I 152 ROTESMA	1.4	0.4	0.22	1.4	0.4

Table 5: Bridge Section Definitions 09 - PCC I Girders 1 - General, Part 3 of 4

Table 5: Bridge Section Definitions 09 - PCC I Girders 1 - General, Part 3 of 4

Section	ROOuterThk	FHoriz1	FHoriz2	CurbLoc	CurbLeft	CurbRight	CurbMedian
	m	m	m		m	m	m
TABLERO 30	0.22	0.305	0.305	Program Determined	1.4	1.4	0.

Table 5: Bridge Section Definitions 09 - PCC I Girders 1 - General, Part 4 of 4

Table 5: Bridge Section Definitions 09 - PCC I Girders 1 - General, Part 4 of 4

Section	CurbMWidth	RefPtOffX	RefPtOffY
	m	m	m
TABLERO 30	0.	0.	0.

1.5. Aparatos de Apoyos:

Se definieron con las sgts características:

Table 6: Bridge Abutment Definitions

Table 6: Bridge Abutment Definitions

Abutment	GirderSup	SubType	FSProp
BABT1	Bottom	Spring	Fixed

Ing. Antonio N. Pangrazio
Representante Legal

Ing. JORGE REGUEIRO
SOTEC S.A.

Ing. José María Molinas Rojas
Reg. MOPC 2831

Table 7: Bridge Object Definitions 06 - Abutments, Part 1 of 2

Table 7: Bridge Object Definitions 06 - Abutments, Part 1 of 2

BridgeObj	Location	SupportName	BearingDir	DiaphProp	SubType	AbutProp	SubElev	HorizOff
							m	m
PUENTE 120m	Start	Start Abutment	Default	None	Abutment	BABT1	-1.89	0.
PUENTE 120m	End	Span 4	Default	None	Abutment	BABT1	-1.89	0.

Table 7: Bridge Object Definitions 06 - Abutments, Part 2 of 2

Table 7: Bridge Object Definitions 06 - Abutments, Part 2 of 2

BridgeObj	Location	SupportName	BearProp	BearResProp	BearElev	BearAngle
					m	Degrees
PUENTE 120m	Start	Start Abutment	RollerTransv	None	-1.74	0.
PUENTE 120m	End	Span 4	Roller	None	-1.74	0.

1.6. Porticos de Apoyos Intermedios:

Table 8: Bridge Bent Definitions 1 - General

Table 8: Bridge Bent Definitions 1 - General

PILAS	BeamLength	BeamSect	Type	GirderSup1	BearDist1	GirderSup2	BearDist2	NumCols
	m				m		m	
PORTICO PILA	8.5	PORTICO_PILA100X100	Double	Bottom	0.575	Bottom	0.575	2

Table 9: Bridge Bent Definitions 2 - Column Data, Part 1 of 2

Table 9: Bridge Bent Definitions 2 - Column Data, Part 1 of 2

Bent	ColNum	Section	Distance	Height	Angle	ColSupport	RHLong	RHTrans
			m	m	Degrees			
PORTICO PILA	1	D900-PILA	1.7	7.	0.	Fixed	1.	1.
PORTICO PILA	2	D900-PILA	6.8	7.	0.	Fixed	1.	1.

Table 9: Bridge Bent Definitions 2 - Column Data, Part 2 of 2

Table 9: Bridge Bent Definitions 2 - Column Data, Part 2 of 2

Bent	ColNum	Section	ColSupport	HingeTop	HingeBot	R1Release	R2Release	R3Release
PORTICO PILA	1	D900-PILA	Fixed	Auto	Auto	Fixed	Fixed	Fixed
PORTICO PILA	2	D900-PILA	Fixed	Auto	Auto	Fixed	Fixed	Fixed

Ing. JORGE REGUEIRO
SOTEC S.A.

Ing. José María Molinas Rojas
Reg MOPC 2031

Ing. Antonio M. Pangrazio
Representante Legal

Table 10: Bridge Object Definitions 07 - Bents, Part 1 of 3

Table 10: Bridge Object Definitions 07 - Bents, Part 1 of 3

BridgeObj	SpanName	BentProp	Continuous	SupportName	BearingDir	BentElev	HorizOff	DiaphBefore
						m	m	
PUENTE 120m	Span 1	PORTICO PILA	No	Span 1	Default	-2.02	0.	None
PUENTE 120m	Span 2	PORTICO PILA	No	Span 2	Default	-2.02	0.	None
PUENTE 120m	Span 3	PORTICO PILA	No	Span 3	Default	-2.02	0.	None

Table 10: Bridge Object Definitions 07 - Bents, Part 2 of 3

Table 10: Bridge Object Definitions 07 - Bents, Part 2 of 3

BridgeObj	SpanName	SupportName	DiaphAfter	ResPropSS	ResElevSS	MeshAtBent	BearProp1	BrResProp1
					m			
PUENTE 120m	Span 1	Span 1	None	None	-0.6096	Yes	Roller	None
PUENTE 120m	Span 2	Span 2	None	None	-0.6096	Yes	Roller	None
PUENTE 120m	Span 3	Span 3	None	None	-0.6096	Yes	Roller	None

Table 10: Bridge Object Definitions 07 - Bents, Part 3 of 3

Table 10: Bridge Object Definitions 07 - Bents, Part 3 of 3

BridgeObj	SpanName	SupportName	BearElev1	BearAngle1	BearProp2	BrResProp2	BearElev2	BearAngle2
			m	Degrees			m	Degrees
PUENTE 120m	Span 1	Span 1	-1.87	0.	RollerTransv	None	-1.87	0.
PUENTE 120m	Span 2	Span 2	-1.87	0.	RollerTransv	None	-1.87	0.
PUENTE 120m	Span 3	Span 3	-1.87	0.	RollerTransv	None	-1.87	0.

1.7. Diafragmas: El tablero fue modelado sin vigas riostras o diafragmas.

1.8. Bearings

Table 12: Bridge Bearing Definitions

Table 12: Bridge Bearing Definitions

Bearing	Type	U1Type	U2Type	U3Type	R1Type	R2Type	R3Type
Pinned	User	Fixed	Fixed	Fixed	Free	Free	Free

Ing. JORGE REGUEIRO
SOTEC S.A.

Ing. Antonio N. Pangrazio
Representante Legal

Ing. José María Molinas Rojas
Reg. MOPC 2831

Table 12: Bridge Bearing Definitions

Bearing	Type	U1Type	U2Type	U3Type	R1Type	R2Type	R3Type
Roller	User	Fixed	Free	Free	Free	Free	Free
RollerLongit	User	Fixed	Fixed	Free	Free	Free	Free
RollerTransv	User	Fixed	Free	Fixed	Free	Free	Free

Table 13: Bridge Model Summary 01 - Bearing Supports

Table 13: Bridge Model Summary 01 - Bearing Supports

BridgeObj	SpanName	Station m	Type	Bearing	BearProp	BearElev m	BearAngle Degrees
PUENTE 120m	Start Abutment	0.	Abutment	1	RollerTransv	-1.74	0.
PUENTE 120m	Start Abutment	0.	Abutment	2	Pinned	-1.74	0.
PUENTE 120m	Start Abutment	0.	Abutment	3	RollerTransv	-1.74	0.
PUENTE 120m	Start Abutment	0.	Abutment	4	RollerTransv	-1.74	0.
PUENTE 120m	Span 1	30.	Bent-Before	1	Roller	-1.87	0.
PUENTE 120m	Span 1	30.	Bent-Before	2	RollerLongit	-1.87	0.
PUENTE 120m	Span 1	30.	Bent-Before	3	Roller	-1.87	0.
PUENTE 120m	Span 1	30.	Bent-Before	4	Roller	-1.87	0.
PUENTE 120m	Span 2	60.	Bent-Before	1	Roller	-1.87	0.
PUENTE 120m	Span 2	60.	Bent-Before	2	RollerLongit	-1.87	0.
PUENTE 120m	Span 2	60.	Bent-Before	3	Roller	-1.87	0.
PUENTE 120m	Span 2	60.	Bent-Before	4	Roller	-1.87	0.
PUENTE 120m	Span 3	90.	Bent-Before	1	Roller	-1.87	0.
PUENTE 120m	Span 3	90.	Bent-Before	2	RollerLongit	-1.87	0.
PUENTE 120m	Span 3	90.	Bent-Before	3	Roller	-1.87	0.
PUENTE 120m	Span 3	90.	Bent-Before	4	Roller	-1.87	0.
PUENTE 120m	Span 4	120.	Abutment	1	Roller	-1.74	0.
PUENTE 120m	Span 4	120.	Abutment	2	RollerLongit	-1.74	0.
PUENTE 120m	Span 4	120.	Abutment	3	Roller	-1.74	0.
PUENTE 120m	Span 4	120.	Abutment	4	Roller	-1.74	0.

2. Propiedades de los materiales:

Las propiedades empleadas en el modelo son las siguientes:

Ing. JORGE REGUEIRO
SOTEC S.A.

Ing. José María Molinas Rojas
Reg. MOPC 2031

Ing. Antonio Pangrazio
Representante Legal

Table 14: Propiedades de los materiales 02 – Propiedades básicas de los materiales

Table 14: Propiedades de los materiales 02 - Basic Mechanical Properties

Material	UnitWeight Tonf/m3	UnitMass Tonf-s2/m4	E1 Tonf/m2	G12 Tonf/m2	U12	A1 1/C
A416 Gr270	7.8490E+00	8.0038E-01	20037484.34			1.1700E-05
AP 420 DN	7.8490E+00	8.0038E-01	20389019.16			1.1700E-05
Fck 400	2.4000E+00	2.4473E-01	2534563.54	1056068.14	0.2	9.9000E-06
HA-25	2.5485E+00	2.5988E-01	3266686.22	1361119.26	0.2	5.5000E-06
HA-40	2.5485E+00	2.5988E-01	3701262.22	1542192.59	0.2	5.5000E-06

Table 16: Propiedades de los materiales 03b - Datos del Concreto

Table 16: Propiedades de los materiales 03b - Concrete Data

Material	Fc Tonf/m2	eFc Tonf/m2	FinalSlope
Fck 400	4000.	4000.	-0.1
HA-25	2549.29	2549.29	-0.1
HA-40	4078.86	4078.86	-0.1

Table 17: Propiedades de los materiales 03e – Datos del Acero de Refuerzo para Hormigón

Table 17: Propiedades de los materiales 03e - Rebar Data

Material	Fy Tonf/m2	Fu Tonf/m2	FinalSlope
AP 420 DN	42000.	63200.	-0.1

Table 18: Propiedades de los materiales 03f – Datos del tendón de Pretensado

Table 18: Propiedades de los materiales 03f - Tendon Data

Material	Fy Tonf/m2	Fu Tonf/m2	FinalSlope
A416 Gr270	172320.	189820.	-0.1

Ing. JORGE REGUEIRO
SOTEC S.A.

Ing. Antonio M. Pangrazio
Representante Legal

Ing. José María Molinas Rojas
Reg. MOPC 2831

Ing. JORGE REGUEIRO
SOTEC S.A.

Ing. Antonio N. Pangrazio
Representante Legal

Ing. José María Molinas Rojas
Reg. MOPC 2831

3. Propiedades de la sección:

3.1. Elementos lineales: Vigas Y Pilas.

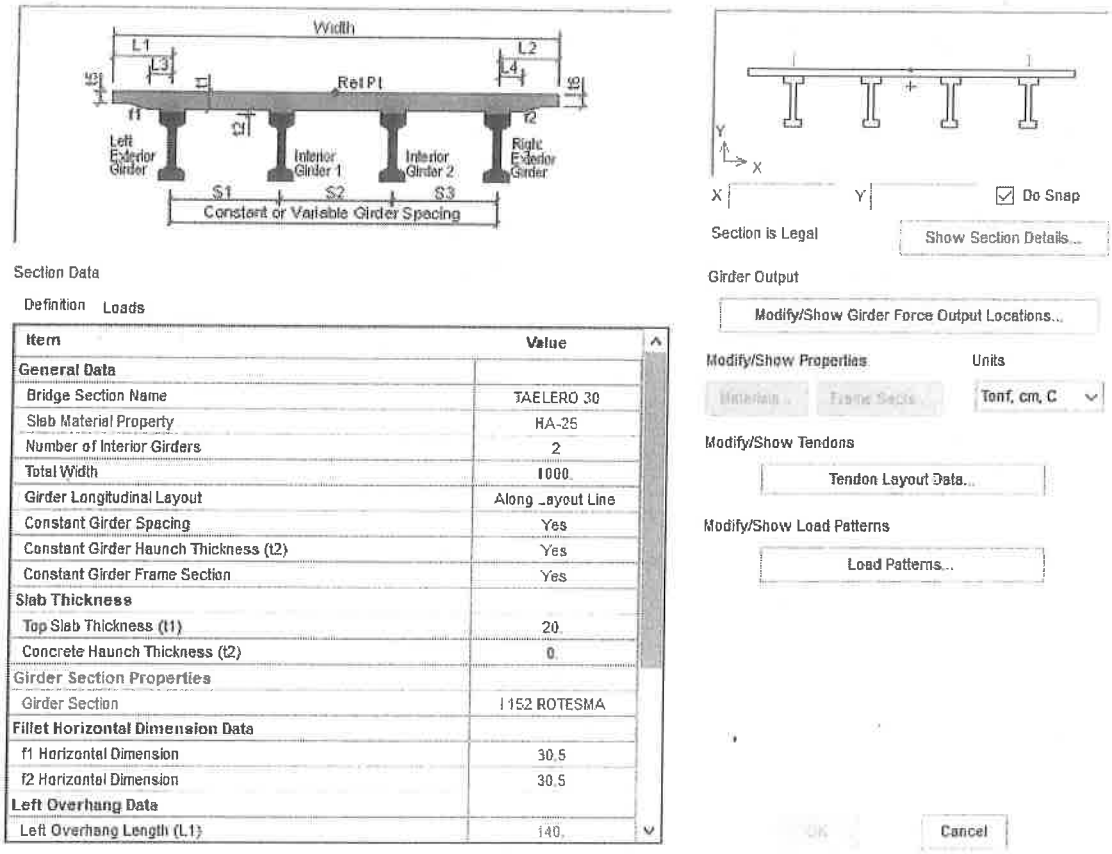

Definición de la sección típica de puente – Tipologia tablero vigas pretesas y super deck de concreto.

Table 19: Frame Section Properties 01 - General, Part 1 of 4

Table 19: Frame Section Properties 01 - General, Part 1 of 4

SectionName	Material	Shape	t3	t2	Area	TorsConst	I33	I22
			m	m	m2	m4	m4	m4
D900-PILA	HA-25	Circle	0.9		0.636173	0.064412	0.032206	0.032206
I 152 ROTESMA	HA-40	PC Conc I Girder	1.52	0.6	0.418	0.005101	0.118357	0.006418
PORTICO_PILA 100X100	HA-25	Rectangular	1.	1.	1.	0.140833	0.083333	0.083333
V_P_100X100	HA-25	Rectangular	1.	1.	1.	0.140833	0.083333	0.083333

Ing. JORGE REGUEIRO
SOTEC S.A.

Ing. Antonio N. Pangrazio
Representante Legal

Ing. José María Molinas Rojas
Reg. MOPC 2831

PUENTE 120 m ROTESMA
3. Propiedades de la sección:

MEMORIA DE CÁLCULO
30 abril 2021

Section Name I 152 ROTESMA

Section Notes Modify/Show Notes...

Convert to User Defined

Section Dimensions

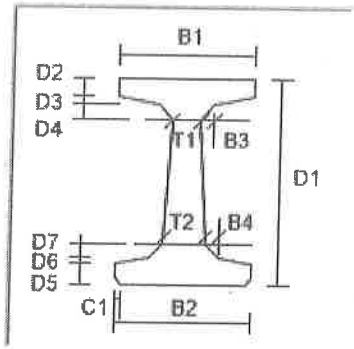

B1	60.
B2	50.
B3	0.
B4	0.
D1	152.
D2	21.
D3	0.
D4	0.
D5	21.
D6	0.
D7	0.
T1	17.
T2	17.
C1	0.

Section

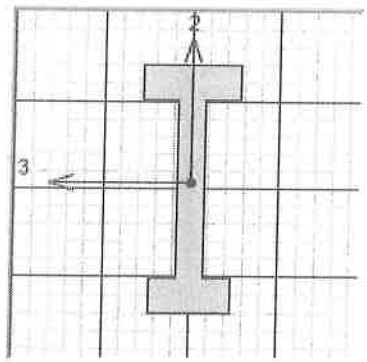

Properties

HA-40 +

Section Properties...

Time Dependent Properties...

Sección de I ROTESMA EMPLEADA.

Section Name I 152 ROTESMA

Properties

Cross-section (axial) area	4180.	Section modulus about 3 axis	149269.65
Moment of Inertia about 3 axis	11835690.	Section modulus about 2 axis	21392.861
Moment of Inertia about 2 axis	641785.8	Plastic modulus about 3 axis	202081.47
Product of Inertia about 2-3	0.	Plastic modulus about 2 axis	39972.5
Shear area in 2 direction	2453.8368	Radius of Gyration about 3 axis	53.2119
Shear area in 3 direction	3431.2835	Radius of Gyration about 2 axis	12.391
Torsional constant	510142.9	Shear Center Eccentricity (x3)	0.

Propiedades geométricas I ROTESMA.

Ing. JORGE REGUEIRO
SOTEC S.A.

Ing. Antonio N. Pangrazio
Representante Legal

Ing. José María Molinas Rojas
Reg. MOPC 2831

Tabla 19: Propiedades de las secciones Vigas y pilas 01 - General, Part 2 of 4

Table 19: Frame Section Properties 01 - General, Part 2 of 4

SectionName	I23	AS2	AS3
	m4	m2	m2
D900-PILA	0.	0.572555	0.572555
I 152 ROTESMA	0.	0.245384	0.343128
PORTICO_PILA 100X100	0.	0.833333	0.833333
V_P_100X100	0.	0.833333	0.833333

Table 19: Propiedades de sección lineal 01 - General, Part 3 of 4

Table 19: Frame Section Properties 01 - General, Part 3 of 4

SectionName	S33	S22	Z33	Z22	R33	R22
	m3	m3	m3	m3	m	m
D900-PILA	0.071569	0.071569	0.1215	0.1215	0.225	0.225
I 152 ROTESMA	0.14927	0.021393	0.202081	0.039973	0.532119	0.12391
PORTICO_PILA 100X100	0.166667	0.166667	0.25	0.25	0.288675	0.288675
V_P_100X100	0.166667	0.166667	0.25	0.25	0.288675	0.288675

Table 19: Frame Section Properties 01 - General, Part 4 of 4

Table 19: Frame Section Properties 01 - General, Part 4 of 4

SectionName	AMod	A2Mod	A3Mod	JMod	I2Mod	I3Mod	MMod	WMod
D900-PILA	1.	1.	1.	1.	1.	1.	1.	1.
I 152 ROTESMA	1.	1.	1.	1.	1.	1.	1.	1.
PORTICO_PILA 100X100	1.	1.	1.	1.	1.	1.	1.	1.
V_P_100X100	1.	1.	1.	1.	1.	1.	1.	1.

Table 20: Frame Section Properties 02 - Concrete Column, Part 1 of 3

Table 20: Frame Section Properties 02 - Concrete Column, Part 1 of 3

SectionName	RebarMatL	RebarMatC	ReinfConfig	LatReinf	Cover	NumBarsCirc	NumBars3Dir
					m		
BentCol	AP 420 DN	AP 420 DN	Rectangular	Ties	0.04		3
D900-PILA	AP 420 DN	AP 420 DN	Circular	Ties	0.04	14	
V_P_100X100	AP 420 DN	AP 420 DN	Rectangular	Ties	0.04		3

Table 20: Frame Section Properties 02 - Concrete Column, Part 2 of 3

Table 20: Frame Section Properties 02 - Concrete Column, Part 2 of 3

SectionName	NumBars2Dir
D900-PILA	
FSEC3	3

Ing. JORGE REGUEIRO
SOTEC S.A.

Ing. Antonio N. Pangrazio
Representante Legal

Ing. José María Molinas Rojas
Reg. MOPC 2831

Table 20: Frame Section Properties 02 - Concrete Column, Part 2 of 3

SectionName	NumBars2Dir
V_P_100X100	3

Table 20: Frame Section Properties 02 - Concrete Column, Part 3 of 3

Table 20: Frame Section Properties 02 - Concrete Column, Part 3 of 3

SectionName	BarSizeL	BarSizeC	SpacingC m	NumCBars2	NumCBars3
D900-PILA	25d	8d	0.2		
V_P_100X100	N20	10d	0.15	3	3

Table 21: Frame Section Properties 03 - Concrete Beam, Part 1 of 2

Table 21: Frame Section Properties 03 - Concrete Beam, Part 1 of 2

SectionName	RebarMatL	RebarMatC	TopCover m	BotCover m
PORTICO_PILA 100X100	AP 420 DN	AP 420 DN	0.04	0.04

Table 21: Frame Section Properties 03 - Concrete Beam, Part 2 of 2

Table 21: Frame Section Properties 03 - Concrete Beam, Part 2 of 2

SectionName	TopLeftArea m2	TopRghtArea m2	BotLeftArea m2	BotRghtArea m2
PORTICO_PILA 100X100	0.0049	0.0049	0.0034	0.0034

Table 22: Frame Section Properties 05 - Nonprismatic

Table 22: Frame Section Properties 05 - Nonprismatic

SectionName	SegmentNum	StartSect	EndSect	AbsLength m	VarLength	EI33Var	EI22Var
BentBeam	1	V_P_100X100	FSEC3		1.5	Parabolic	Linear
BentBeam	3	FSEC3	V_P_100X100		1.5	Parabolic	Linear

Ing. JORGE REGUEIRO
SOTEC S.A.

Ing. Antonio N. Pangrazio
Representante Legal

Ing. José María Molinas Rojas
Reg. MOPC 2831

3.2. Tendones de pretensado:

Table 23: Tendon Section Definitions, Part 1 of 2

Table 23: Tendon Section Definitions, Part 1 of 2

TendonSect	ModelOpt	Material	Diameter	Area	TorsConst	I	AS
			m	m2	m4	m4	m2
CABLE D5/8"	Elements	A416 Gr270	0.01382	0.00015	3.581E-09	1.790E-09	0.000135

Table 23: Tendon Section Definitions, Part 2 of 2

Table 23: Tendon Section Definitions, Part 2 of 2

TendonSect	AMod	A2Mod	A3Mod	JMod	I2Mod	I3Mod	MMod	WMod
CABLE D5/8"	1.	1.	1.	1.	1.	1.	1.	1.

3.3. Areas

Table 24: Area Section Properties, Part 1 of 3

Table 24: Area Section Properties, Part 1 of 3

Section	Material	AreaType	Type	DrillDOF	Thickness	BendThick	F11Mod
					m	m	
LOSA 22CM	HA-25	Shell	Shell-Thin	Yes	0.25	0.25	1.

Table 24: Area Section Properties, Part 2 of 3

Table 24: Area Section Properties, Part 2 of 3

Section	F22Mod	F12Mod	M11Mod	M22Mod	M12Mod	V13Mod	V23Mod
LOSA 22CM	1.	1.	1.	1.	1.	1.	1.

Table 24: Area Section Properties, Part 3 of 3

Table 24: Area Section Properties, Part 3 of 3

Section	MMod	WMod
LOSA 22CM	1.	1.

Ing. JORGE REGUEIRO
SOTEC S.A.

Ing. Antonio N. Pangrazio
Representante Legal

Ing. José María Molinas Rojas
Reg. MOPC 2831

4. Cargas de Diseño:

Las cargas consideradas en el diseño se describen a continuación:

4.1. Load patterns

Table 26: Patrones de Carga ó hipótesis de carga:

Table 26: Load Pattern Definitions

LoadPat	DesignType	SelfWtMult	AutoLoad
DEAD	Dead	1.	
PreTension	Prestress	0.	
Barrier	Dead	0.	
Sidewalk	Dead	0.	
DW	Wearing Surface	0.	
Temperature Pos	Temperature	0.	
Temperature Neg	Temperature	0.	
WindS	Wind	0.	AASHTO 2018
WindLL	Wind - Live Load	0.	Auto
Peatonal	Pedestrian LL	0.	

4.2. Vehículos de Carga:

Table 27: Vehicles 2 - General Vehicles 1 - General, Part 1 of 6

Table 27: Vehicles 2 - General Vehicles 1 - General, Part 1 of 6

VehName	FromLibrary	LibraryName	FltAxleFac	AxleFac	UniffFac	SupportMom	IntSupport
HL-93M	Yes	AASHTO.xml	1.	1.33	1.	Yes	Yes
HL-93K	Yes	AASHTO.xml	1.	1.33	1.	Yes	Yes
HL-93S	Yes	AASHTO.xml	1.	1.33	1.	Yes	Yes
HL-93F	Yes	AASHTO.xml	1.	1.15	1.	Yes	Yes
HL-93LB	Yes	AASHTO.xml	1.	1.33	1.	Yes	Yes

REVISIÓN 01: Se agrega el camión bi-tren del MOPC

Table 27: Vehicles 2 - General Vehicles 1 - General, Part 2 of 6

Table 27: Vehicles 2 - General Vehicles 1 - General, Part 2 of 6

VehName	OtherResp	AxleMom Tonf	AxleMType	AxleMWidth m	AxleMDbl	AxleOther Tonf	AxleOType
HL-93M	Yes	0.	One Point		No	0.	One Point
HL-93K	Yes	0.	One Point		No	0.	One Point
HL-93S	No	0.	One Point		No	0.	One Point
HL-93F	Yes	0.	One Point		No	0.	One Point
HL-93LB	No	0.	One Point		No	0.	One Point

Ing. JORGE REGUEIRO
SOTEC S.A.

Ing. José María Molinas Rojas
Reg. MOPC 2831

Ing. Antonio M. Pangrazio
Representante Legal

Table 27: Vehicles 2 - General Vehicles 1 - General, Part 3 of 6

Table 27: Vehicles 2 - General Vehicles 1 - General, Part 3 of 6

VehName	AxleOWidth m	LEffAxle	LEffUnif	ForStraddle	StraddleFac	NumInter	MinExtDist m
HL-93M		None	None	No		3	0.3048
HL-93K		None	None	No		4	0.3048
HL-93S		None	None	No		7	0.3048
HL-93F		None	None	No		3	0.3048
HL-93LB		None	None	No		5	0.3048

Table 27: Vehicles 2 - General Vehicles 1 - General, Part 4 of 6

Table 27: Vehicles 2 - General Vehicles 1 - General, Part 4 of 6

VehName	MinIntDist m	StayInLane	CGHTAxle m	CGHTUnif m	Notes	AdjustSuper
HL-93M	0.6096	No	0.	0.		No
HL-93K	0.6096	No	0.	0.		No
HL-93S	0.6096	No	0.	0.		No
HL-93F	0.6096	No	0.	0.		No
HL-93LB	0.6096	No	0.	0.		No

Table 27: Vehicles 2 - General Vehicles 1 - General, Part 5 of 6

Table 27: Vehicles 2 - General Vehicles 1 - General, Part 5 of 6

VehName	IgnoreVert	Centrifugal	Braking	BrakAxleSF 1	BrakUnifSF 1	BrakingSet2	BrakingSkew
HL-93M	No	No	Yes	0.25	0.	No	No
HL-93K	No	No	Yes	0.25	0.	No	No
HL-93S	No	No	Yes	0.25	0.	No	No
HL-93F	No	No	No				
HL-93LB	No	No	Yes	0.25	0.	No	No

Table 27: Vehicles 2 - General Vehicles 1 - General, Part 6 of 6

Table 27: Vehicles 2 - General Vehicles 1 - General, Part 6 of 6

VehName	NosingForce Tonf	DesignType
HL-93M	0.	Vehicle Live
HL-93K	0.	Vehicle Live
HL-93S	0.	Vehicle Live
HL-93F	0.	Vehicle Fatigue
HL-93LB	0.	Vehicle Live

Table 28: Vehicles 3 - General Vehicles 2 - Loads, Part 1 of 2

Table 28: Vehicles 3 - General Vehicles 2 - Loads, Part 1 of 2

VehName	LoadType	InterUnif Tonf/m	UnifType	UnifWidth m	InterAxle Tonf	AxleType	AxleWidth m	InterMinD m
HL-93M	Leading Load	0.952	Fixed Width	3.048	11.3398	Two Points	1.8288	

Ing. JORGE REGUEIRO
SOTEC S.A.

Ing. José María Molinas Rojas
Reg. MOPC 2831

Ing. Antonio N. Pangrazio
Representante Legal

Table 28: Vehicles 3 - General Vehicles 2 - Loads, Part 1 of 2

VehName	LoadType	InterUnif Tonf/m	UnifType	UnifWidth m	InterAxle Tonf	AxleType	AxleWidth m	InterMinD m
HL-93M	Fixed Length	0.952	Fixed Width	3.048	11.3398	Two Points	1.8288	1.2192
HL-93M	Trailing Load	0.952	Fixed Width	3.048				
HL-93K	Leading Load	0.952	Fixed Width	3.048	3.6287	Two Points	1.8288	
HL-93K	Fixed Length	0.952	Fixed Width	3.048	14.515	Two Points	1.8288	4.2672
HL-93K	Variable Length	0.952	Fixed Width	3.048	14.515	Two Points	1.8288	4.2672
HL-93K	Trailing Load	0.952	Fixed Width	3.048				
HL-93S	Leading Load	0.857	Fixed Width	3.048	3.2659	Two Points	1.8288	
HL-93S	Fixed Length	0.857	Fixed Width	3.048	13.0635	Two Points	1.8288	4.2672
HL-93S	Fixed Length	0.857	Fixed Width	3.048	13.0635	Two Points	1.8288	4.2672
HL-93S	Variable Length	0.857	Fixed Width	3.048	3.2659	Two Points	1.8288	15.24
HL-93S	Fixed Length	0.857	Fixed Width	3.048	13.0635	Two Points	1.8288	4.2672
HL-93S	Fixed Length	0.857	Fixed Width	3.048	13.0635	Two Points	1.8288	4.2672
HL-93S	Trailing Load	0.857	Fixed Width	3.048				
HL-93F	Leading Load	0.	Fixed Width	0.3048	3.6287	Two Points	1.8288	
HL-93F	Fixed Length	0.	Fixed Width	0.3048	14.515	Two Points	1.8288	4.2672
HL-93F	Fixed Length	0.	Fixed Width	0.3048	14.515	Two Points	1.8288	9.144
HL-93LB	Leading Load	0.952	Fixed Width	3.048	11.3398	Two Points	1.8288	
HL-93LB	Fixed Length	0.952	Fixed Width	3.048	11.3398	Two Points	1.8288	1.2192
HL-93LB	Variable Length	0.952	Fixed Width	3.048	11.3398	Two Points	1.8288	7.9248
HL-93LB	Fixed Length	0.952	Fixed Width	3.048	11.3398	Two Points	1.8288	1.2192
HL-93LB	Trailing Load	0.952	Fixed Width	3.048				

Table 28: Vehicles 3 - General Vehicles 2 - Loads, Part 2 of 2

Table 28: Vehicles 3 - General Vehicles 2 - Loads, Part 2 of 2

VehName	InterMaxD m
HL-93M	
HL-93M	
HL-93M	
HL-93K	
HL-93K	
HL-93K	9.144
HL-93K	
HL-93S	
HL-93S	
HL-93S	
HL-93S	0.
HL-93S	
HL-93S	
HL-93S	
HL-93F	
HL-93F	
HL-93F	
HL-93LB	
HL-93LB	

Ing. JORGE REGUEIRO
SOTEC S.A.

Ing. Antonio N. Pangrazio
Representante Legal

Ing. José María Molinas Rojas
Reg. MOPC 2831

Table 28: Vehicles 3 - General Vehicles 2 - Loads, Part 2 of 2

VehName	InterMaxD m
HL-93LB	12.192
HL-93LB	
HL-93LB	

Table 29: Vehicles 4 - Vehicle Classes

Table 29: Vehicles 4 - Vehicle Classes

VehClass	VehName	ScaleFactor
HL-93M	HL-93M	1.
HL-93K	HL-93K	1.
HL-93S	HL-93S	1.
HL-93F	HL-93F	1.
HL-93LB	HL-93LB	1.
VECL1	HL-93M	1.
VECL1	HL-93K	1.
VECL1	HL-93S	1.
VECL1	HL-93F	1.

4.3. Bridge loading

Table 30: Bridge Load Definitions 02 - Line

Table 30: Bridge Load Definitions 02 - Line

Name	Type	CoordSys	Dir	RefLoc	Dist m	FOverL Tonf/m	MOverL Tonf-m/m
<TABLERO 30>BL1	Force	GLOBAL	Gravity	Left Edge of Deck	0.25	0.3	
<TABLERO 30>BL2	Force	GLOBAL	Gravity	Right Edge of Deck	0.25	0.3	
<WindLL>BSL_0DegFWLL_C	Force	<PUENTE 120m>CSys	Y	Left Edge of Deck	5.	-0.05	
<WindLL>BSL_0DegFWLL_L	Force	<PUENTE 120m>CSys	Y	Left Edge of Deck	2.5	-0.05	
<WindLL>BSL_0DegFWLL_R	Force	<PUENTE 120m>CSys	Y	Right Edge of Deck	2.5	-0.05	
<WindLL>BSL_0DegMWLL_C	Moment	<PUENTE 120m>CSys	X	Left Edge of Deck	5.		0.00496
<WindLL>BSL_0DegMWLL_L	Moment	<PUENTE 120m>CSys	X	Left Edge of Deck	2.5		0.00496
<WindLL>BSL_0DegMWLL_R	Moment	<PUENTE 120m>CSys	X	Right Edge of Deck	2.5		0.00496

Ing. JORGE REGUEIRO
SOTEC S.A.

Ing. Antonio N. Pangrazio
Representante Legal

Ing. José María Molinas Rojas
Reg. MOPC 2831

Table 30: Bridge Load Definitions 02 - Line

Name	Type	CoordSys	Dir	RefLoc	Dist m	FOverL Tonf/m	MOverL Tonf-m/m
<WindLL>BSL_90DegFWLL_C	Force	<PUENTE 120m>CSys	X	Left Edge of Deck	5.	0.05	
<WindLL>BSL_90DegFWLL_L	Force	<PUENTE 120m>CSys	X	Left Edge of Deck	2.5	0.05	
<WindLL>BSL_90DegFWLL_R	Force	<PUENTE 120m>CSys	X	Right Edge of Deck	2.5	0.05	
<WindLL>BSL_90DegMWLL_C	Moment	<PUENTE 120m>CSys	Y	Left Edge of Deck	5.		0.00496
<WindLL>BSL_90DegMWLL_L	Moment	<PUENTE 120m>CSys	Y	Left Edge of Deck	2.5		0.00496
<WindLL>BSL_90DegMWLL_R	Moment	<PUENTE 120m>CSys	Y	Right Edge of Deck	2.5		0.00496
<WindS>BSL_0DegFWS_C	Force	<PUENTE 120m>CSys	Y	Left Edge of Deck	5.	-0.148	
<WindS>BSL_0DegFWS_L	Force	<PUENTE 120m>CSys	Y	Left Edge of Deck	2.5	-0.148	
<WindS>BSL_0DegFWS_R	Force	<PUENTE 120m>CSys	Y	Right Edge of Deck	2.5	-0.148	
<WindS>BSL_0DegMWS_C	Moment	<PUENTE 120m>CSys	X	Left Edge of Deck	5.		-0.05899
<WindS>BSL_0DegMWS_L	Moment	<PUENTE 120m>CSys	X	Left Edge of Deck	2.5		-0.05899
<WindS>BSL_0DegMWS_R	Moment	<PUENTE 120m>CSys	X	Right Edge of Deck	2.5		-0.05899
<WindS>BSL_90DegFWS_C	Force	<PUENTE 120m>CSys	X	Left Edge of Deck	5.	0.148	
<WindS>BSL_90DegFWS_L	Force	<PUENTE 120m>CSys	X	Left Edge of Deck	2.5	0.148	
<WindS>BSL_90DegFWS_R	Force	<PUENTE 120m>CSys	X	Right Edge of Deck	2.5	0.148	
<WindS>BSL_90DegMWS_C	Moment	<PUENTE 120m>CSys	Y	Left Edge of Deck	5.		-0.05899
<WindS>BSL_90DegMWS_L	Moment	<PUENTE 120m>CSys	Y	Left Edge of Deck	2.5		-0.05899
<WindS>BSL_90DegMWS_R	Moment	<PUENTE 120m>CSys	Y	Right Edge of Deck	2.5		-0.05899
<WindS>BSL_VertWS_B	Force	<PUENTE 120m>CSys	Z	Right Edge of Deck	2.5	0.976	
<WindS>BSL_VertWS_F	Force	<PUENTE 120m>CSys	Z	Left Edge of Deck	2.5	0.976	

Ing. JORGE REGUEIRO
SOTEC S.A.

Ing. Antonio N. Pangrazio
Representante Legal

Ing. José María Molinas Rojas
Reg. MOPC 2831

Table 31: Bridge Load Definitions 03 - Area, Part 1 of 2

Table 31: Bridge Load Definitions 03 - Area, Part 1 of 2

Name	Type	CoordSys	Dir	RefLocLft	DistLft m	RefLocRgt
<TABLERO 30>SL1	Force	GLOBAL	Gravity		0.	
<TABLERO 30>SL2	Force	GLOBAL	Gravity	Left Edge of Deck	0.	Left Edge of Deck
CARPETA ASFALTICA DW	Force	GLOBAL	Gravity	Left Edge of Deck	1.4	Left Edge of Deck
Peaton Izq.	Force	GLOBAL	Gravity	Left Edge of Deck	0.2	Left Edge of Deck
Peaton Der.	Force	GLOBAL	Gravity	Right Edge of Deck	1.	Right Edge of Deck

Table 31: Bridge Load Definitions 03 - Area, Part 2 of 2

Table 31: Bridge Load Definitions 03 - Area, Part 2 of 2

Name	DistRgt m	FOverL2Lft Tonf/m2	FOverL2Rgt Tonf/m2
<TABLERO 30>SL1	1.4	0.25	0.25
<TABLERO 30>SL2	1.4	0.25	0.25
CARPETA ASFALTICA DW	8.6	0.15	0.15
Peaton Izq.	1.	0.36	0.36
Peaton Der.	0.2	0.36	0.36

5. Casos de Carga:

Los casos de carga considerados fueron:

5.1. Definitions

Table 32: Load Case Definitions, Part 1 of 2

Table 32: Load Case Definitions, Part 1 of 2

Case	Type	MLFactVert	InitialCond	MLFactBrake	ModalCase	MLFactCentr
DEAD	LinStatic		Zero			
MODAL	LinModal		Zero			
MOVE1	LinMoving	1.	Zero	0.		0.
Barrier (barreras)	LinStatic		Zero			
Sidewalk (Camineros)	LinStatic		Zero			
DW	LinStatic		Zero			
T_Change_Pos	LinStatic		Zero			
T_Change_Neg	LinStatic		Zero			
WindS	LinMSStat		Zero			

Ing. JORGE REGUEIRO
SOTEC S.A.

Ing. José María Molinas Rojas
Reg. MOPC 2831

Ing. Antonio N. Pangrazio
Representante Legal

Table 32: Load Case Definitions, Part 1 of 2

Case	Type	MLFactVert	InitialCond	MLFactBrake	ModalCase	MLFactCentr
WindLL	LinMSStat		Zero			
Peatonal	LinStatic		Zero			
Pretensado	LinStatic		Zero			

Table 32: Load Case Definitions, Part 2 of 2

Table 32: Load Case Definitions, Part 2 of 2

Case	BaseCase	DesActOpt	MassSource	DesignAct
DEAD		Prog Det		Non-Composite
MODAL		Prog Det		Other
MOVE1		Prog Det		Short-Term Composite
Barrier		Prog Det		Non-Composite
Sidewalk		Prog Det		Non-Composite
DW		Prog Det		Long-Term Composite
T_Change_Pos		User		Short-Term Composite
T_Change_Neg		User		Short-Term Composite
WindS		Prog Det		Short-Term Composite
WindLL		Prog Det		Short-Term Composite
Peatonal		Prog Det		Short-Term Composite
Pretensado		Prog Det		Long-Term Composite

5.2. *Static case load assignments*

Table 33: Case - Static 1 - Load Assignments

Table 33: Case - Static 1 - Load Assignments

Case	LoadType	LoadName	LoadSF
DEAD	Load pattern	DEAD	1.
Barrier	Load pattern	Barrier	1.
Sidewalk	Load pattern	Sidewalk	1.
DW	Load pattern	DW	1.
T_Change_Pos	Load pattern	Temperature Pos	1.
T_Change_Neg	Load pattern	Temperature Neg	1.
Peatonal	Load pattern	Peatonal	1.
Pretensado	Load pattern	PreTension	1.

Ing. JORGE REGUEIRO
SOTEC S.A.

Ing. Antonio N. Pangrazio
Representante Legal

Ing. José María Molinas Rojas
Reg. MOPC 2831

6. Load combinations

This section provides load combination information.

Table 34: Combination Definitions

Table 34: Combination Definitions

ComboName	ComboType	CaseName	ScaleFactor
DC-STR-I	Linear Add	DEAD	1.25
DC-STR-I		Barrier	1.25
DC-STR-I		Sidewalk	1.25
DC-SERV-I	Linear Add	DEAD	1.
DC-SERV-I		Barrier	1.
DC-SERV-I		Sidewalk	1.
DW-STR-I	Linear Add	DW	1.5
DW-SERV-I	Linear Add	DW	1.
P-STR-I	Linear Add		
P-SERV-I	Linear Add		
LL-STR-I	Linear Add	MOVE1	1.75
LL-SERV-I	Linear Add	MOVE1	1.
Mu-STR-I	Linear Add	DEAD	1.25
Mu-STR-I		Barrier	1.25
Mu-STR-I		Sidewalk	1.25
Mu-STR-I		DW	1.5
Mu-STR-I		MOVE1	1.75
Mu-SERV-I	Linear Add	DEAD	1.
Mu-SERV-I		Barrier	1.
Mu-SERV-I		Sidewalk	1.
Mu-SERV-I		DW	1.
Mu-SERV-I		MOVE1	1.
Str-I1	Linear Add		1.25
Str-I1		Barrier	1.25
Str-I1		Sidewalk	1.25
Str-I1		T_Change_Pos	0.5
Str-I1		DW	1.5
Str-I2	Linear Add		1.25
Str-I2		Barrier	1.25
Str-I2		Sidewalk	1.25
Str-I2		T_Change_Pos	0.5
Str-I2		DW	0.65
Str-I3	Linear Add		1.25
Str-I3		Barrier	1.25
Str-I3		Sidewalk	1.25
Str-I3		T_Change_Neg	0.5
Str-I3		DW	1.5
Str-I4	Linear Add		1.25
Str-I4		Barrier	1.25
Str-I4		Sidewalk	1.25
Str-I4		T_Change_Neg	0.5
Str-I4		DW	0.65
Str-I5	Linear Add		0.9
Str-I5		Barrier	0.9
Str-I5		Sidewalk	0.9
Str-I5		T_Change_Pos	0.5

Ing. JORGE REGUEIRO
SOTEC S.A.

Ing. José María Molinas Rojas
Reg. MOPC 2831

Ing. Antonio A. Pangrazio
Representante Legal

Table 34: Combination Definitions

ComboName	ComboType	CaseName	ScaleFactor
Str-I5		DW	1.5
Str-I6	Linear Add		0.9
Str-I6		Barrier	0.9
Str-I6		Sidewalk	0.9
Str-I6		T_Change_Pos	0.5
Str-I6		DW	0.65
Str-I7	Linear Add		0.9
Str-I7		Barrier	0.9
Str-I7		Sidewalk	0.9
Str-I7		T_Change_Neg	0.5
Str-I7		DW	1.5
Str-I8	Linear Add		0.9
Str-I8		Barrier	0.9
Str-I8		Sidewalk	0.9
Str-I8		T_Change_Neg	0.5
Str-I8		DW	0.65
StrIGroup1	Envelope	Str-I1	1.
StrIGroup1		Str-I2	1.
StrIGroup1		Str-I3	1.
StrIGroup1		Str-I4	1.
StrIGroup1		Str-I5	1.
StrIGroup1		Str-I6	1.
StrIGroup1		Str-I7	1.
StrIGroup1		Str-I8	1.
Str-Deformation-I 1	Linear Add		1.25
Str-Deformation-I 1		Barrier	1.25
Str-Deformation-I 1		Sidewalk	1.25
Str-Deformation-I 1		T_Change_Pos	1.2
Str-Deformation-I 1		DW	1.5
Str-Deformation-I 2	Linear Add		1.25
Str-Deformation-I 2		Barrier	1.25
Str-Deformation-I 2		Sidewalk	1.25
Str-Deformation-I 2		T_Change_Pos	1.2
Str-Deformation-I 2		DW	0.65
Str-Deformation-I 3	Linear Add		1.25
Str-Deformation-I 3		Barrier	1.25
Str-Deformation-I 3		Sidewalk	1.25
Str-Deformation-I 3		T_Change_Neg	1.2
Str-Deformation-I 3		DW	1.5
Str-Deformation-I 4	Linear Add		1.25

Ing. JORGE REGUEIRO
SOTEC S.A.

Ing. Antonio N. Pangrazio
Representante Legal

Ing. José María Molinas Rojas
Reg. MOPC 2831

Table 34: Combination Definitions

ComboName	ComboType	CaseName	ScaleFactor
Str-Deformation-I 4		Barrier	1.25
Str-Deformation-I 4		Sidewalk	1.25
Str-Deformation-I 4		T_Change_Neg	1.2
Str-Deformation-I 4		DW	0.65
Str-Deformation-I 5	Linear Add		0.9
Str-Deformation-I 5		Barrier	0.9
Str-Deformation-I 5		Sidewalk	0.9
Str-Deformation-I 5		T_Change_Pos	1.2
Str-Deformation-I 5		DW	1.5
Str-Deformation-I 6	Linear Add		0.9
Str-Deformation-I 6		Barrier	0.9
Str-Deformation-I 6		Sidewalk	0.9
Str-Deformation-I 6		T_Change_Pos	1.2
Str-Deformation-I 6		DW	0.65
Str-Deformation-I 7	Linear Add		0.9
Str-Deformation-I 7		Barrier	0.9
Str-Deformation-I 7		Sidewalk	0.9
Str-Deformation-I 7		T_Change_Neg	1.2
Str-Deformation-I 7		DW	1.5
Str-Deformation-I 8	Linear Add		0.9
Str-Deformation-I 8		Barrier	0.9
Str-Deformation-I 8		Sidewalk	0.9
Str-Deformation-I 8		T_Change_Neg	1.2
Str-Deformation-I 8		DW	0.65
Str-II1	Linear Add		1.25
Str-II1		Barrier	1.25
Str-II1		Sidewalk	1.25
Str-II1		T_Change_Pos	0.5
Str-II1		DW	1.5
Str-II2	Linear Add		1.25
Str-II2		Barrier	1.25
Str-II2		Sidewalk	1.25
Str-II2		T_Change_Pos	0.5
Str-II2		DW	0.65
Str-II3	Linear Add		1.25

Ing. JORGE REGUEIRO
SOTEC S.A.

Ing. Antonio N. Pangrazio
Representante Legal

Ing. José María Molinas Rojas
Reg. MOPC 2831

Table 34: Combination Definitions

ComboName	ComboType	CaseName	ScaleFactor
Str-II3		Barrier	1.25
Str-II3		Sidewalk	1.25
Str-II3		T_Change_Neg	0.5
Str-II3		DW	1.5
Str-II4	Linear Add		1.25
Str-II4		Barrier	1.25
Str-II4		Sidewalk	1.25
Str-II4		T_Change_Neg	0.5
Str-II4		DW	0.65
Str-II5	Linear Add		0.9
Str-II5		Barrier	0.9
Str-II5		Sidewalk	0.9
Str-II5		T_Change_Pos	0.5
Str-II5		DW	1.5
Str-II6	Linear Add		0.9
Str-II6		Barrier	0.9
Str-II6		Sidewalk	0.9
Str-II6		T_Change_Pos	0.5
Str-II6		DW	0.65
Str-II7	Linear Add		0.9
Str-II7		Barrier	0.9
Str-II7		Sidewalk	0.9
Str-II7		T_Change_Neg	0.5
Str-II7		DW	1.5
Str-II8	Linear Add		0.9
Str-II8		Barrier	0.9
Str-II8		Sidewalk	0.9
Str-II8		T_Change_Neg	0.5
Str-II8		DW	0.65
StrIIGroup8	Envelope	Str-II1	1.
StrIIGroup8		Str-II2	1.
StrIIGroup8		Str-II3	1.
StrIIGroup8		Str-II4	1.
StrIIGroup8		Str-II5	1.
StrIIGroup8		Str-II6	1.
StrIIGroup8		Str-II7	1.
StrIIGroup8		Str-II8	1.
Str-Deformation-II1	Linear Add		1.25
Str-Deformation-II1		Barrier	1.25
Str-Deformation-II1		Sidewalk	1.25
Str-Deformation-II1		T_Change_Pos	1.2
Str-Deformation-II1		DW	1.5
Str-Deformation-II2	Linear Add		1.25
Str-Deformation-II2		Barrier	1.25
Str-Deformation-II2		Sidewalk	1.25
Str-Deformation-II2		T_Change_Pos	1.2

Ing. JORGE REGUEIRO
SOTEC S.A.

Ing. Antonio N. Pangrazio
Representante Legal

Ing. José María Molinas Rojas
Reg. MDPC 2831

Table 34: Combination Definitions

ComboName	ComboType	CaseName	ScaleFactor
Str-Deformation-I 12		DW	0.65
Str-Deformation-I 13	Linear Add		1.25
Str-Deformation-I 13		Barrier	1.25
Str-Deformation-I 13		Sidewalk	1.25
Str-Deformation-I 13		T_Change_Neg	1.2
Str-Deformation-I 13		DW	1.5
Str-Deformation-I 14	Linear Add		1.25
Str-Deformation-I 14		Barrier	1.25
Str-Deformation-I 14		Sidewalk	1.25
Str-Deformation-I 14		T_Change_Neg	1.2
Str-Deformation-I 14		DW	0.65
Str-Deformation-I 15	Linear Add		0.9
Str-Deformation-I 15		Barrier	0.9
Str-Deformation-I 15		Sidewalk	0.9
Str-Deformation-I 15		T_Change_Pos	1.2
Str-Deformation-I 15		DW	1.5
Str-Deformation-I 16	Linear Add		0.9
Str-Deformation-I 16		Barrier	0.9
Str-Deformation-I 16		Sidewalk	0.9
Str-Deformation-I 16		T_Change_Pos	1.2
Str-Deformation-I 16		DW	0.65
Str-Deformation-I 17	Linear Add		0.9
Str-Deformation-I 17		Barrier	0.9
Str-Deformation-I 17		Sidewalk	0.9
Str-Deformation-I 17		T_Change_Neg	1.2
Str-Deformation-I 17		DW	1.5
Str-Deformation-I 18	Linear Add		0.9
Str-Deformation-I 18		Barrier	0.9
Str-Deformation-I 18		Sidewalk	0.9
Str-Deformation-I 18		T_Change_Neg	1.2

Ing. JORGE REGUEIRO
SOTEC S.A.

Ing. Antonio N. Pangrazio
Representante Legal

Ing. José María Molinas Rojas
Reg. MOPC 2831

Table 34: Combination Definitions

ComboName	ComboType	CaseName	ScaleFactor
Str-Deformation-I I8		DW	0.65
Str-III1	Linear Add		1.25
Str-III1		Barrier	1.25
Str-III1		Sidewalk	1.25
Str-III1		WindS	1.
Str-III1		T_Change_Pos	0.5
Str-III1		DW	1.5
Str-III2	Linear Add		1.25
Str-III2		Barrier	1.25
Str-III2		Sidewalk	1.25
Str-III2		WindS	1.
Str-III2		T_Change_Pos	0.5
Str-III2		DW	0.65
Str-III3	Linear Add		1.25
Str-III3		Barrier	1.25
Str-III3		Sidewalk	1.25
Str-III3		WindS	1.
Str-III3		T_Change_Neg	0.5
Str-III3		DW	1.5
Str-III4	Linear Add		1.25
Str-III4		Barrier	1.25
Str-III4		Sidewalk	1.25
Str-III4		WindS	1.
Str-III4		T_Change_Neg	0.5
Str-III4		DW	0.65
Str-III5	Linear Add		1.25
Str-III5		Barrier	1.25
Str-III5		Sidewalk	1.25
Str-III5		WindS	-1.
Str-III5		T_Change_Pos	0.5
Str-III5		DW	1.5
Str-III6	Linear Add		1.25
Str-III6		Barrier	1.25
Str-III6		Sidewalk	1.25
Str-III6		WindS	-1.
Str-III6		T_Change_Pos	0.5
Str-III6		DW	0.65
Str-III7	Linear Add		1.25
Str-III7		Barrier	1.25
Str-III7		Sidewalk	1.25
Str-III7		WindS	-1.
Str-III7		T_Change_Neg	0.5
Str-III7		DW	1.5
Str-III8	Linear Add		1.25
Str-III8		Barrier	1.25
Str-III8		Sidewalk	1.25
Str-III8		WindS	-1.
Str-III8		T_Change_Neg	0.5
Str-III8		DW	0.65
Str-III9	Linear Add		0.9
Str-III9		Barrier	0.9
Str-III9		Sidewalk	0.9
Str-III9		WindS	1

Ing. JORGE REGUEIRO
SOTEC S.A.

Ing. Antonio N. Pangrazio
Representante Legal

Ing. José María Molinas Rojas
Reg. MOPC 2831

Table 34: Combination Definitions

ComboName	ComboType	CaseName	ScaleFactor
Str-III9		T_Change_Pos	0.5
Str-III9		DW	1.5
Str-III10	Linear Add		0.9
Str-III10		Barrier	0.9
Str-III10		Sidewalk	0.9
Str-III10		WindS	1.
Str-III10		T_Change_Pos	0.5
Str-III10		DW	0.65
Str-III11	Linear Add		0.9
Str-III11		Barrier	0.9
Str-III11		Sidewalk	0.9
Str-III11		WindS	1.
Str-III11		T_Change_Neg	0.5
Str-III11		DW	1.5
Str-III12	Linear Add		0.9
Str-III12		Barrier	0.9
Str-III12		Sidewalk	0.9
Str-III12		WindS	1.
Str-III12		T_Change_Neg	0.5
Str-III12		DW	0.65
Str-III13	Linear Add		0.9
Str-III13		Barrier	0.9
Str-III13		Sidewalk	0.9
Str-III13		WindS	-1.
Str-III13		T_Change_Pos	0.5
Str-III13		DW	1.5
Str-III14	Linear Add		0.9
Str-III14		Barrier	0.9
Str-III14		Sidewalk	0.9
Str-III14		WindS	-1.
Str-III14		T_Change_Pos	0.5
Str-III14		DW	0.65
Str-III15	Linear Add		0.9
Str-III15		Barrier	0.9
Str-III15		Sidewalk	0.9
Str-III15		WindS	-1.
Str-III15		T_Change_Neg	0.5
Str-III15		DW	1.5
Str-III16	Linear Add		0.9
Str-III16		Barrier	0.9
Str-III16		Sidewalk	0.9
Str-III16		WindS	-1.
Str-III16		T_Change_Neg	0.5
Str-III16		DW	0.65
StrIIIGroup8	Envelope	Str-III1	1.
StrIIIGroup8		Str-III2	1.
StrIIIGroup8		Str-III3	1.
StrIIIGroup8		Str-III4	1.
StrIIIGroup8		Str-III5	1.
StrIIIGroup8		Str-III6	1.
StrIIIGroup8		Str-III7	1.
StrIIIGroup8		Str-III8	1.
StrIIIGroup8		Str-III9	1.
StrIIIGroup8		Str-III10	1.

Ing. JORGE REGUEIRO
SOTEC S.A.

Ing. Antonio N. Pangrazio
Representante Legal

Ing. José María Molinas Rojas
Reg. MOPC 2831

Table 34: Combination Definitions

ComboName	ComboType	CaseName	ScaleFactor
StrIIIGroup8		Str-III11	1.
StrIIIGroup8		Str-III12	1.
StrIIIGroup8		Str-III13	1.
StrIIIGroup8		Str-III14	1.
StrIIIGroup8		Str-III15	1.
StrIIIGroup8		Str-III16	1.
Str-Deformation-III1	Linear Add		1.25
Str-Deformation-III1		Barrier	1.25
Str-Deformation-III1		Sidewalk	1.25
Str-Deformation-III1		WindS	1.
Str-Deformation-III1		T_Change_Pos	1.2
Str-Deformation-III1		DW	1.5
Str-Deformation-III2	Linear Add		1.25
Str-Deformation-III2		Barrier	1.25
Str-Deformation-III2		Sidewalk	1.25
Str-Deformation-III2		WindS	1.
Str-Deformation-III2		T_Change_Pos	1.2
Str-Deformation-III2		DW	0.65
Str-Deformation-III3	Linear Add		1.25
Str-Deformation-III3		Barrier	1.25
Str-Deformation-III3		Sidewalk	1.25
Str-Deformation-III3		WindS	1.
Str-Deformation-III3		T_Change_Neg	1.2
Str-Deformation-III3		DW	1.5
Str-Deformation-III4	Linear Add		1.25
Str-Deformation-III4		Barrier	1.25
Str-Deformation-III4		Sidewalk	1.25
Str-Deformation-III4		WindS	1.
Str-Deformation-III4		T_Change_Neg	1.2
Str-Deformation-III4		DW	0.65
Str-Deformation-III5	Linear Add		1.25
Str-Deformation-III5		Barrier	1.25

Ing. JORGE REGUEIRO
SOTEC S.A.

Ing. José María Molinas Rojas
Reg. MOPC 2831

Ing. Antonio N. Pangrazio
Representante Legal

Table 34: Combination Definitions

ComboName	ComboType	CaseName	ScaleFactor
Str-Deformation-III5		Sidewalk	1.25
Str-Deformation-III5		WindS	-1.
Str-Deformation-III5		T_Change_Pos	1.2
Str-Deformation-III5		DW	1.5
Str-Deformation-III6	Linear Add		1.25
Str-Deformation-III6		Barrier	1.25
Str-Deformation-III6		Sidewalk	1.25
Str-Deformation-III6		WindS	-1.
Str-Deformation-III6		T_Change_Pos	1.2
Str-Deformation-III6		DW	0.65
Str-Deformation-III7	Linear Add		1.25
Str-Deformation-III7		Barrier	1.25
Str-Deformation-III7		Sidewalk	1.25
Str-Deformation-III7		WindS	-1.
Str-Deformation-III7		T_Change_Neg	1.2
Str-Deformation-III7		DW	1.5
Str-Deformation-III8	Linear Add		1.25
Str-Deformation-III8		Barrier	1.25
Str-Deformation-III8		Sidewalk	1.25
Str-Deformation-III8		WindS	-1.
Str-Deformation-III8		T_Change_Neg	1.2
Str-Deformation-III8		DW	0.65
Str-Deformation-III9	Linear Add		0.9
Str-Deformation-III9		Barrier	0.9
Str-Deformation-III9		Sidewalk	0.9
Str-Deformation-III9		WindS	1.
Str-Deformation-III9		T_Change_Pos	1.2
Str-Deformation-III9		DW	1.5
Str-Deformation-III10	Linear Add		0.9
Str-Deformation-III10		Barrier	0.9

Ing. JORGE REGUEIRO
SOTEC S.A.

Ing. José María Molinas Rojas
Reg. MOPC 2831

Ing. Antonio N. Pangrazio
Representante Legal

Table 34: Combination Definitions

ComboName	ComboType	CaseName	ScaleFactor
Str-Deformation-III10		Sidewalk	0.9
Str-Deformation-III10		WindS	1.
Str-Deformation-III10		T_Change_Pos	1.2
Str-Deformation-III10		DW	0.65
Str-Deformation-III11	Linear Add		0.9
Str-Deformation-III11		Barrier	0.9
Str-Deformation-III11		Sidewalk	0.9
Str-Deformation-III11		WindS	1.
Str-Deformation-III11		T_Change_Neg	1.2
Str-Deformation-III11		DW	1.5
Str-Deformation-III12	Linear Add		0.9
Str-Deformation-III12		Barrier	0.9
Str-Deformation-III12		Sidewalk	0.9
Str-Deformation-III12		WindS	1.
Str-Deformation-III12		T_Change_Neg	1.2
Str-Deformation-III12		DW	0.65
Str-Deformation-III13	Linear Add		0.9
Str-Deformation-III13		Barrier	0.9
Str-Deformation-III13		Sidewalk	0.9
Str-Deformation-III13		WindS	-1.
Str-Deformation-III13		T_Change_Pos	1.2
Str-Deformation-III13		DW	1.5
Str-Deformation-III14	Linear Add		0.9
Str-Deformation-III14		Barrier	0.9
Str-Deformation-III14		Sidewalk	0.9
Str-Deformation-III14		WindS	-1.
Str-Deformation-III14		T_Change_Pos	1.2
Str-Deformation-III14		DW	0.65
Str-Deformation-III15	Linear Add		0.9
Str-Deformation-III15		Barrier	0.9

Ing. JORGE REGUEIRO
SOTEC S.A.

Ing. José María Molinas Rojas
Reg. MOPC 2831

Ing. Antonio N. Pangrazio
Representante Legal

Table 34: Combination Definitions

ComboName	ComboType	CaseName	ScaleFactor
Str-Deformation-III15		Sidewalk	0.9
Str-Deformation-III15		WindS	-1.
Str-Deformation-III15		T_Change_Neg	1.2
Str-Deformation-III15		DW	1.5
Str-Deformation-III16	Linear Add		0.9
Str-Deformation-III16		Barrier	0.9
Str-Deformation-III16		Sidewalk	0.9
Str-Deformation-III16		WindS	-1.
Str-Deformation-III16		T_Change_Neg	1.2
Str-Deformation-III16		DW	0.65
Str-IV1	Linear Add		1.5
Str-IV1		Barrier	1.5
Str-IV1		Sidewalk	1.5
Str-IV1		T_Change_Pos	0.5
Str-IV1		DW	1.5
Str-IV2	Linear Add		1.5
Str-IV2		Barrier	1.5
Str-IV2		Sidewalk	1.5
Str-IV2		T_Change_Pos	0.5
Str-IV2		DW	0.65
Str-IV3	Linear Add		1.5
Str-IV3		Barrier	1.5
Str-IV3		Sidewalk	1.5
Str-IV3		T_Change_Neg	0.5
Str-IV3		DW	1.5
Str-IV4	Linear Add		1.5
Str-IV4		Barrier	1.5
Str-IV4		Sidewalk	1.5
Str-IV4		T_Change_Neg	0.5
Str-IV4		DW	0.65
Str-IV5	Linear Add		0.9
Str-IV5		Barrier	0.9
Str-IV5		Sidewalk	0.9
Str-IV5		T_Change_Pos	0.5
Str-IV5		DW	1.5
Str-IV6	Linear Add		0.9
Str-IV6		Barrier	0.9
Str-IV6		Sidewalk	0.9
Str-IV6		T_Change_Pos	0.5
Str-IV6		DW	0.65
Str-IV7	Linear Add		0.9
Str-IV7		Barrier	0.9
Str-IV7		Sidewalk	0.9
Str-IV7		T_Change_Neg	0.5
Str-IV7		DW	1.5
Str-IV8	Linear Add		0.9

Ing. JORGE REGUEIRO
SOTEC S.A.

Ing. José María Molinas Rojas
Reg. MOPC 2031

Ing. Antonio N. Pangrazio
Representante Legal

Table 34: Combination Definitions

ComboName	ComboType	CaseName	ScaleFactor
Str-IV8		Barrier	0.9
Str-IV8		Sidewalk	0.9
Str-IV8		T_Change_Neg	0.5
Str-IV8		DW	0.65
StrIVGroup16	Envelope	Str-IV1	1.
StrIVGroup16		Str-IV2	1.
StrIVGroup16		Str-IV3	1.
StrIVGroup16		Str-IV4	1.
StrIVGroup16		Str-IV5	1.
StrIVGroup16		Str-IV6	1.
StrIVGroup16		Str-IV7	1.
StrIVGroup16		Str-IV8	1.
Str-Deformation-IV1	Linear Add		1.5
Str-Deformation-IV1		Barrier	1.5
Str-Deformation-IV1		Sidewalk	1.5
Str-Deformation-IV1		T_Change_Pos	1.2
Str-Deformation-IV1		DW	1.5
Str-Deformation-IV2	Linear Add		1.5
Str-Deformation-IV2		Barrier	1.5
Str-Deformation-IV2		Sidewalk	1.5
Str-Deformation-IV2		T_Change_Pos	1.2
Str-Deformation-IV2		DW	0.65
Str-Deformation-IV3	Linear Add		1.5
Str-Deformation-IV3		Barrier	1.5
Str-Deformation-IV3		Sidewalk	1.5
Str-Deformation-IV3		T_Change_Neg	1.2
Str-Deformation-IV3		DW	1.5
Str-Deformation-IV4	Linear Add		1.5
Str-Deformation-IV4		Barrier	1.5
Str-Deformation-IV4		Sidewalk	1.5
Str-Deformation-IV4		T_Change_Neg	1.2
Str-Deformation-IV4		DW	0.65
Str-Deformation-IV5	Linear Add		0.9
Str-Deformation-IV5		Barrier	0.9
Str-Deformation-IV5		Sidewalk	0.9

Ing. JORGE REGUEIRO
SOTEC S.A.

Ing. José María Molinas Rojas
MDPC 2831

Ing. Antonio N. Pangrazio
Representante Legal

Table 34: Combination Definitions

ComboName	ComboType	CaseName	ScaleFactor
Str-Deformation-I V5		T_Change_Pos	1.2
Str-Deformation-I V5		DW	1.5
Str-Deformation-I V6	Linear Add		0.9
Str-Deformation-I V6		Barrier	0.9
Str-Deformation-I V6		Sidewalk	0.9
Str-Deformation-I V6		T_Change_Pos	1.2
Str-Deformation-I V6		DW	0.65
Str-Deformation-I V7	Linear Add		0.9
Str-Deformation-I V7		Barrier	0.9
Str-Deformation-I V7		Sidewalk	0.9
Str-Deformation-I V7		T_Change_Neg	1.2
Str-Deformation-I V7		DW	1.5
Str-Deformation-I V8	Linear Add		0.9
Str-Deformation-I V8		Barrier	0.9
Str-Deformation-I V8		Sidewalk	0.9
Str-Deformation-I V8		T_Change_Neg	1.2
Str-Deformation-I V8		DW	0.65
Str-V1	Linear Add		1.25
Str-V1		Barrier	1.25
Str-V1		Sidewalk	1.25
Str-V1		WindS	1.
Str-V1		T_Change_Pos	0.5
Str-V1		WindLL	1.
Str-V1		DW	1.5
Str-V2	Linear Add		1.25
Str-V2		Barrier	1.25
Str-V2		Sidewalk	1.25
Str-V2		WindS	1.
Str-V2		T_Change_Pos	0.5
Str-V2		WindLL	1.
Str-V2		DW	0.65
Str-V3	Linear Add		1.25
Str-V3		Barrier	1.25
Str-V3		Sidewalk	1.25
Str-V3		WindS	1.
Str-V3		T_Change_Neg	0.5
Str-V3		WindLL	1.
Str-V3		DW	1.5
Str-V4	Linear Add		1.25
Str-V4		Barrier	1.25

Ing. JORGE REGUEIRO
SOTEC S.A.

Ing. José María Molinas Rojas
Reg. MOPC 2031

Ing. Antonio N. Pangrazio
Representante Legal

Table 34: Combination Definitions

ComboName	ComboType	CaseName	ScaleFactor
Str-V4		Sidewalk	1.25
Str-V4		WindS	1.
Str-V4		T_Change_Neg	0.5
Str-V4		WindLL	1.
Str-V4		DW	0.65
Str-V5	Linear Add		1.25
Str-V5		Barrier	1.25
Str-V5		Sidewalk	1.25
Str-V5		WindS	-1.
Str-V5		T_Change_Pos	0.5
Str-V5		WindLL	1.
Str-V5		DW	1.5
Str-V6	Linear Add		1.25
Str-V6		Barrier	1.25
Str-V6		Sidewalk	1.25
Str-V6		WindS	-1.
Str-V6		T_Change_Pos	0.5
Str-V6		WindLL	1.
Str-V6		DW	0.65
Str-V7	Linear Add		1.25
Str-V7		Barrier	1.25
Str-V7		Sidewalk	1.25
Str-V7		WindS	-1.
Str-V7		T_Change_Neg	0.5
Str-V7		WindLL	1.
Str-V7		DW	1.5
Str-V8	Linear Add		1.25
Str-V8		Barrier	1.25
Str-V8		Sidewalk	1.25
Str-V8		WindS	-1.
Str-V8		T_Change_Neg	0.5
Str-V8		WindLL	1.
Str-V8		DW	0.65
Str-V9	Linear Add		0.9
Str-V9		Barrier	0.9
Str-V9		Sidewalk	0.9
Str-V9		WindS	1.
Str-V9		T_Change_Pos	0.5
Str-V9		WindLL	1.
Str-V9		DW	1.5
Str-V10	Linear Add		0.9
Str-V10		Barrier	0.9
Str-V10		Sidewalk	0.9
Str-V10		WindS	1.
Str-V10		T_Change_Pos	0.5
Str-V10		WindLL	1.
Str-V10		DW	0.65
Str-V11	Linear Add		0.9
Str-V11		Barrier	0.9
Str-V11		Sidewalk	0.9
Str-V11		WindS	1.
Str-V11		T_Change_Neg	0.5
Str-V11		WindLL	1.
Str-V11		DW	1.5

Ing. JORGE REGUEIRO
SOTEC S.A.

Ing. José María Molinas Rojas
Reg. MOPC 2031

Ing. Antonio N. Pangrazio
Representante Legal

Table 34: Combination Definitions

ComboName	ComboType	CaseName	ScaleFactor
Str-V12	Linear Add		0.9
Str-V12		Barrier	0.9
Str-V12		Sidewalk	0.9
Str-V12		WindS	1.
Str-V12		T_Change_Neg	0.5
Str-V12		WindLL	1.
Str-V12		DW	0.65
Str-V13	Linear Add		0.9
Str-V13		Barrier	0.9
Str-V13		Sidewalk	0.9
Str-V13		WindS	-1.
Str-V13		T_Change_Pos	0.5
Str-V13		WindLL	1.
Str-V13		DW	1.5
Str-V14	Linear Add		0.9
Str-V14		Barrier	0.9
Str-V14		Sidewalk	0.9
Str-V14		WindS	-1.
Str-V14		T_Change_Pos	0.5
Str-V14		WindLL	1.
Str-V14		DW	0.65
Str-V15	Linear Add		0.9
Str-V15		Barrier	0.9
Str-V15		Sidewalk	0.9
Str-V15		WindS	-1.
Str-V15		T_Change_Neg	0.5
Str-V15		WindLL	1.
Str-V15		DW	1.5
Str-V16	Linear Add		0.9
Str-V16		Barrier	0.9
Str-V16		Sidewalk	0.9
Str-V16		WindS	-1.
Str-V16		T_Change_Neg	0.5
Str-V16		WindLL	1.
Str-V16		DW	0.65
StrVGroup8	Envelope	Str-V1	1.
StrVGroup8		Str-V2	1.
StrVGroup8		Str-V3	1.
StrVGroup8		Str-V4	1.
StrVGroup8		Str-V5	1.
StrVGroup8		Str-V6	1.
StrVGroup8		Str-V7	1.
StrVGroup8		Str-V8	1.
StrVGroup8		Str-V9	1.
StrVGroup8		Str-V10	1.
StrVGroup8		Str-V11	1.
StrVGroup8		Str-V12	1.
StrVGroup8		Str-V13	1.
StrVGroup8		Str-V14	1.
StrVGroup8		Str-V15	1.
StrVGroup8		Str-V16	1.
Str-Deformation-V1	Linear Add		1.25
Str-Deformation-V1		Barrier	1.25

Ing. JORGE REGUEIRO
SOTEC S.A.

Ing. José María Molinas Rojas
Reg. MOPC 2831

Ing. Antonio N. Pangrazio
Representante Legal

Table 34: Combination Definitions

ComboName	ComboType	CaseName	ScaleFactor
Str-Deformation-V1		Sidewalk	1.25
Str-Deformation-V1		WindS	1.
Str-Deformation-V1		T_Change_Pos	1.2
Str-Deformation-V1		WindLL	1.
Str-Deformation-V1		DW	1.5
Str-Deformation-V2	Linear Add		1.25
Str-Deformation-V2		Barrier	1.25
Str-Deformation-V2		Sidewalk	1.25
Str-Deformation-V2		WindS	1.
Str-Deformation-V2		T_Change_Pos	1.2
Str-Deformation-V2		WindLL	1.
Str-Deformation-V2		DW	0.65
Str-Deformation-V3	Linear Add		1.25
Str-Deformation-V3		Barrier	1.25
Str-Deformation-V3		Sidewalk	1.25
Str-Deformation-V3		WindS	1.
Str-Deformation-V3		T_Change_Neg	1.2
Str-Deformation-V3		WindLL	1.
Str-Deformation-V3		DW	1.5
Str-Deformation-V4	Linear Add		1.25
Str-Deformation-V4		Barrier	1.25
Str-Deformation-V4		Sidewalk	1.25
Str-Deformation-V4		WindS	1.
Str-Deformation-V4		T_Change_Neg	1.2
Str-Deformation-V4		WindLL	1.
Str-Deformation-V4		DW	0.65
Str-Deformation-V5	Linear Add		1.25
Str-Deformation-V5		Barrier	1.25
Str-Deformation-V5		Sidewalk	1.25
Str-Deformation-V5		WindS	-1.

Ing. JORGE REGUEIRO
SOTEC S.A.

Ing. José María Molinas Rojas
Reg. MOPC 2831

Ing. Antonio N. Pangrazio
Representante Legal

Table 34: Combination Definitions

ComboName	ComboType	CaseName	ScaleFactor
Str-Deformation-V5		T_Change_Pos	1.2
Str-Deformation-V5		WindLL	1.
Str-Deformation-V5		DW	1.5
Str-Deformation-V6	Linear Add		1.25
Str-Deformation-V6		Barrier	1.25
Str-Deformation-V6		Sidewalk	1.25
Str-Deformation-V6		WindS	-1.
Str-Deformation-V6		T_Change_Pos	1.2
Str-Deformation-V6		WindLL	1.
Str-Deformation-V6		DW	0.65
Str-Deformation-V7	Linear Add		1.25
Str-Deformation-V7		Barrier	1.25
Str-Deformation-V7		Sidewalk	1.25
Str-Deformation-V7		WindS	-1.
Str-Deformation-V7		T_Change_Neg	1.2
Str-Deformation-V7		WindLL	1.
Str-Deformation-V7		DW	1.5
Str-Deformation-V8	Linear Add		1.25
Str-Deformation-V8		Barrier	1.25
Str-Deformation-V8		Sidewalk	1.25
Str-Deformation-V8		WindS	-1.
Str-Deformation-V8		T_Change_Neg	1.2
Str-Deformation-V8		WindLL	1.
Str-Deformation-V8		DW	0.65
Str-Deformation-V9	Linear Add		0.9
Str-Deformation-V9		Barrier	0.9
Str-Deformation-V9		Sidewalk	0.9
Str-Deformation-V9		WindS	1.
Str-Deformation-V9		T_Change_Pos	1.2
Str-Deformation-V9		WindLL	1.

Ing. JORGE REGUEIRO
SOTEC S.A.

Ing. José María Molinas Rojas
Reg. MOPC 2831

Ing. Antonio N. Pangrazio
Representante Legal

Table 34: Combination Definitions

ComboName	ComboType	CaseName	ScaleFactor
Str-Deformation-V9		DW	1.5
Str-Deformation-V10	Linear Add		0.9
Str-Deformation-V10		Barrier	0.9
Str-Deformation-V10		Sidewalk	0.9
Str-Deformation-V10		WindS	1.
Str-Deformation-V10		T_Change_Pos	1.2
Str-Deformation-V10		WindLL	1.
Str-Deformation-V10		DW	0.65
Str-Deformation-V11	Linear Add		0.9
Str-Deformation-V11		Barrier	0.9
Str-Deformation-V11		Sidewalk	0.9
Str-Deformation-V11		WindS	1.
Str-Deformation-V11		T_Change_Neg	1.2
Str-Deformation-V11		WindLL	1.
Str-Deformation-V11		DW	1.5
Str-Deformation-V12	Linear Add		0.9
Str-Deformation-V12		Barrier	0.9
Str-Deformation-V12		Sidewalk	0.9
Str-Deformation-V12		WindS	1.
Str-Deformation-V12		T_Change_Neg	1.2
Str-Deformation-V12		WindLL	1.
Str-Deformation-V12		DW	0.65
Str-Deformation-V13	Linear Add		0.9
Str-Deformation-V13		Barrier	0.9
Str-Deformation-V13		Sidewalk	0.9
Str-Deformation-V13		WindS	-1.
Str-Deformation-V13		T_Change_Pos	1.2
Str-Deformation-V13		WindLL	1.
Str-Deformation-V13		DW	1.5
Str-Deformation-V14	Linear Add		0.9

Ing. JORGE REGUEIRO
SOTEC S.A.

Ing. José María Molinas Rojas
MPC 2831

Ing. Antonio N. Pangrazio
Representante Legal

Table 34: Combination Definitions

ComboName	ComboType	CaseName	ScaleFactor
Str-Deformation-V14		Barrier	0.9
Str-Deformation-V14		Sidewalk	0.9
Str-Deformation-V14		WindS	-1.
Str-Deformation-V14		T_Change_Pos	1.2
Str-Deformation-V14		WindLL	1.
Str-Deformation-V14		DW	0.65
Str-Deformation-V15	Linear Add		0.9
Str-Deformation-V15		Barrier	0.9
Str-Deformation-V15		Sidewalk	0.9
Str-Deformation-V15		WindS	-1.
Str-Deformation-V15		T_Change_Neg	1.2
Str-Deformation-V15		WindLL	1.
Str-Deformation-V15		DW	1.5
Str-Deformation-V16	Linear Add		0.9
Str-Deformation-V16		Barrier	0.9
Str-Deformation-V16		Sidewalk	0.9
Str-Deformation-V16		WindS	-1.
Str-Deformation-V16		T_Change_Neg	1.2
Str-Deformation-V16		WindLL	1.
Str-Deformation-V16		DW	0.65
EE-I1	Linear Add		1.25
EE-I1		Barrier	1.25
EE-I1		Sidewalk	1.25
EE-I1		DW	1.5
EE-I2	Linear Add		1.25
EE-I2		Barrier	1.25
EE-I2		Sidewalk	1.25
EE-I2		DW	0.65
EE-I3	Linear Add		0.9
EE-I3		Barrier	0.9
EE-I3		Sidewalk	0.9
EE-I3		DW	1.5
EE-I4	Linear Add		0.9
EE-I4		Barrier	0.9
EE-I4		Sidewalk	0.9
EE-I4		DW	0.65
EEIGroup16	Envelope	EE-I1	1.
EEIGroup16		EE-I2	1.

Ing. Antonio N. Pangrazio
Representante Legal

Ing. José María Molinas Rojas
Reg. MOPC 2831

Ing. JORGE REGUEIRO
SOTEC S.A.

Table 34: Combination Definitions

ComboName	ComboType	CaseName	ScaleFactor
EEIGroup16		EE-I3	1.
EEIGroup16		EE-I4	1.
EE-II1	Linear Add		1.25
EE-II1		Barrier	1.25
EE-II1		Sidewalk	1.25
EE-II1		DW	1.5
EE-II2	Linear Add		1.25
EE-II2		Barrier	1.25
EE-II2		Sidewalk	1.25
EE-II2		DW	0.65
EE-II3	Linear Add		0.9
EE-II3		Barrier	0.9
EE-II3		Sidewalk	0.9
EE-II3		DW	1.5
EE-II4	Linear Add		0.9
EE-II4		Barrier	0.9
EE-II4		Sidewalk	0.9
EE-II4		DW	0.65
EEIIGroup4	Envelope	EE-II1	1.
EEIIGroup4		EE-II2	1.
EEIIGroup4		EE-II3	1.
EEIIGroup4		EE-II4	1.
Ser-I1	Linear Add		1.
Ser-I1		Barrier	1.
Ser-I1		Sidewalk	1.
Ser-I1		WindS	1.
Ser-I1		T_Change_Pos	1.
Ser-I1		WindLL	1.
Ser-I1		DW	1.
Ser-I2	Linear Add		1.
Ser-I2		Barrier	1.
Ser-I2		Sidewalk	1.
Ser-I2		WindS	1.
Ser-I2		T_Change_Pos	1.
Ser-I2		WindLL	-1.
Ser-I2		DW	1.
Ser-I3	Linear Add		1.
Ser-I3		Barrier	1.
Ser-I3		Sidewalk	1.
Ser-I3		WindS	1.
Ser-I3		T_Change_Neg	1.
Ser-I3		WindLL	1.
Ser-I3		DW	1.
Ser-I4	Linear Add		1.
Ser-I4		Barrier	1.
Ser-I4		Sidewalk	1.
Ser-I4		WindS	1.
Ser-I4		T_Change_Neg	1.
Ser-I4		WindLL	-1.
Ser-I4		DW	1.
Ser-I5	Linear Add		1.
Ser-I5		Barrier	1.
Ser-I5		Sidewalk	1.
Ser-I5		WindS	-1.

Ing. Antonio N. Pangrazio
Representante Legal

Ing. JORGE REGUEIRO
SOTEC S.A.

Ing. José María Molinas Rojas
Reg. MOPC 2831