Document No.	811	Revision No.	4	Drawing No.	PF 1207-01	Revision Date	1/18/06

HENDRIX

Material Procurement Standard – Aerial Cable Accessories

Item:
Standard Line-Duc

Material:
CH-55 Black HDPE - refer to MPS number 313
CH-68 Grey HDPE - refer to MPS number 312

Manufacturing Process:
Profile Extrusion

Secondary Processes/Treatments:
All boxes shall be marked with a date lot and carton number.

Physical Properties:
Not applicable

Critical Features/Dimensions (refer to drawing):
Not applicable

Acceptance Inspection:
Product shall be of visually uniform cross section and should not exhibit excessive warpage. (*)
The finish shall contain no defects or inconsistencies. (*)
All boxes shall be marked with a date lot and carton number. (*)

Changes by Vendor:
No changes will be made to this product by the vendor without first informing the Hendrix Engineering department and obtaining consent.

Certified Reports:
A certified test report showing results of those properties above, marked with an asterisk (*) made on (1) one sample from each lot of material and in accordance with this specification must be submitted to the attention of the Q.C. Manager prior to or with the shipment. The report shall be identified with the Hendrix catalog number, purchase order number and specification number.

Approvals:

Q.C. Mgr. _____ Procurement _____ Design Eng. BRR Application Eng. EWS

Circle One: **Shift:** 1, (2), 3 **Material Handling:** Box, (Silo)
Machine: 350, 400, 500A, 500B, 500C, (500D), 700.
Material: (CH68 Grey) CH68 Regrind, Other: _____
Downtime: _____ **Reason for downtime:** _____

Type of Examination	Number Failed	Operator Comments:
Start-up:		T 10
X-Ray (voids) (X2) 11		84 7 Boxes
Cosmetic:		8 Box #8
Contamination:		102
Other:		
Total parts produced: 102	**Total Parts Rejected:** 0	**Operator Approval:** TG

Operator: Mike **Date:** 11-11-07 **Machine Hours:** _____ **Part:** HPI-25-01
Mold Number: M3

Circle One: **Shift:** 1, 2, (3) **Material Handling:** Box, (Silo)
Machine: 350, 400, 500A, 500B, 500C, (500D), 700.
Material: (CH68 Grey) CH68 Regrind, Other: _____
Downtime: _____ **Reason for downtime:** _____

Type of Examination	Number Failed	Operator Comments:
Start-up:		T 4
X-Ray (voids) (X2) 111		96 8 Boxes
Cosmetic:		2 Box #9
Contamination:		102
Other:		
Total parts produced:	**Total Parts Rejected:**	**Operator Approval:** MM

Operator: Chris **Date:** 11-4-07 **Machine Hours:** 8 **Part:** HPI 25-01
Mold Number: M3

Circle One: **Shift:** 1, 2, (3) **Material Handling:** Box, (Silo)
Machine: 350, 400, 500A, 500B, 500C, (500D), 700.
Material: (CH68 Grey) CH68 Regrind, Other: _____
Downtime: _____ **Reason for downtime:** _____

Type of Examination	Number Failed	Operator Comments:
Start-up:		192
X-Ray (voids): (X2) 111		T 10 16 Boxes
Cosmetic:		4 Box # 17
Contamination:		206
Other:		
Total parts produced: 206	**Total Parts Rejected:** 0	**Operator Approval:** CB

Document No.	811	Revision No.	4	Drawing No.	PF 1207-01	Revision Date	1/18/06

REVISIONS

REV	DESCRIPTION	DATE	APPROVED
1	JUMBO DIMENSION A CORRECTED; CHANGED 1-3/4 TO 1-7/8	5/15/02	

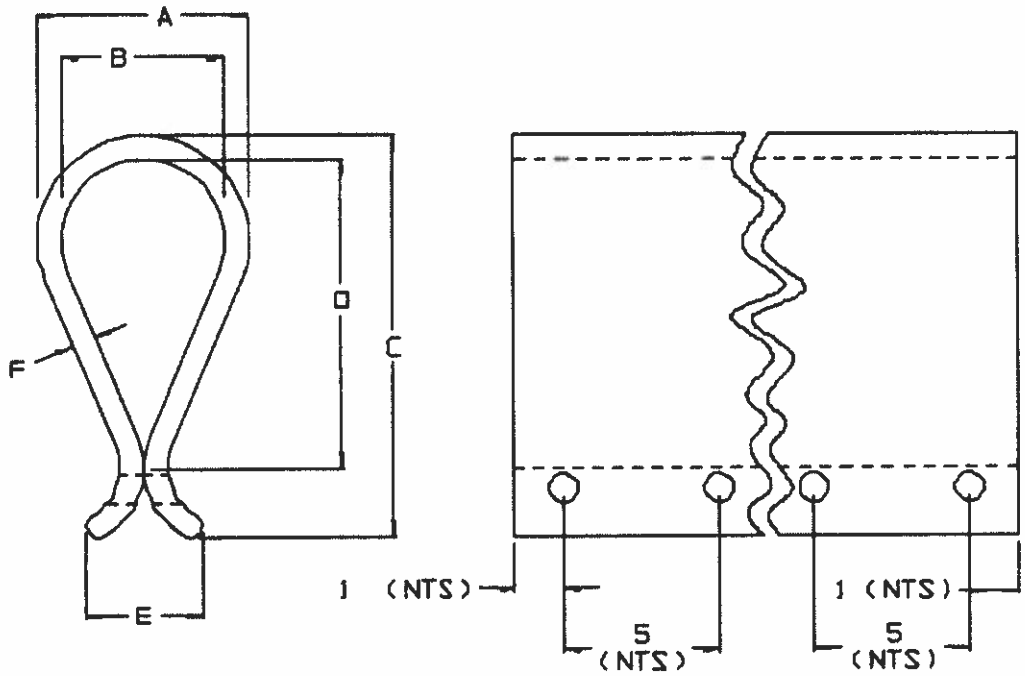

DIMENSION	STANDARD	JUMBO
A	1-3/8	1-7/8
B	1	1-1/2
C	2-5/8	3-1/2
D	2	3
E	1/2	3/4
F	3/16	3/16

UNLESS OTHERWISE SPECIFIED DIMENSIONS ARE IN INCHES
TOLERANCES
DECIMALS
.XX +/- .010
.XXX +/- .005
FRACTIONAL +/- 1/64
ANGULAR +/- 2.0

HENDRIX
53 Old Wilton Road Milford, New Hampshire 03055-3119

MATERIAL: CH-55 or CH-60 HDPE

TITLE: LINE-DUC (STANDARD & JUMBO)

TREATMENT

SCALE	DATE	DRAWING NO.
NONE	9-9-97	PF 1207-01

SIZE	REV	DRAWN BY	CHKD BY
A	4	Kris P.	

G:\PURCHASE\MPS\Aerial Hardware\811.DOC

CABLE TECHNOLOGY LABORATORIES, INC.

690 Jersey Avenue — P.O. Box 707 — Fax: (732) 846-553
New Brunswick, N.J. 08903 Tel: (732) 846-313
(732) 846-3220-

December 1, 2005

Mr. Gary Grenier
Aerial Process Engineer
Hendrix
53 Old Wilton Road
Milford, NH 03055-3119

Report No. 05-113-12

RE: LIQUID-CONTAMINANT, INCLINED-PLANE TRACKING

Cable Technology Laboratories has performed Liquid-Contaminant, Inclined-Plane Tracking and Erosion test on the compound identified by Hendrix as: Gray Blend High Density Polyethylene.

The test was performed fully in accordance with ASTM D 2303 Standard Method. The contaminant solution had a resistivity of 400 Ωcm at 24 °C and its rate of application was 0.15 ml/min. A constant ac voltage of 2500 V was applied between electrodes. None of the samples failed during testing.

The test results are given in the following table.

Specimen Designation	Average Thickness (mils)	Time Under Test (hour)	Results	Observations
A	122	33	Pass	Minimal tracking
B	122	25	Pass	Minimal tracking
C	118	25	Pass	Minimal tracking
D	115	43	Pass	Minimal tracking
E	123	43	Pass	Minimal tracking

The minimum required number of hours to pass was 25 hours.

The column headed "Time Under Test (hour)" indicates the number of hours after which the test was terminated.

Tests supervised and reported by

To: Damon

MACLEAN POWER SYSTEMS

Reliable • Bethea • Continental • Precision • Atlas

TEST REPORT NO.: TR-1593

TEST DATE: April 6, 1999 HDTC

ITEMS TESTED: CT-88H

TEST PERFORMED: Ultimate strength of body (thimble) & eye

TEST PROCEDURE: The clevis thimbles were attached to a simulated deadend eye fixture in a hydraulic testing machine. The load was applied at a uniform ram speed of 1 inch per minute until failure occurred.

TEST RESULTS:

SAMPLE	PLACEMENT OF LOAD	REQUIRED LOAD (lbs.)	LOAD ACHIEVED (lbs.)	MODE OF FAILURE	COMMENTS
1	Thimble/Body	35,000	50,140	Test Stopped	No damage to casting
2	Thimble/Body	35,000	50,210	Test Stopped	No damage to casting
3	Thimble/Body	35,000	50,160	Test Stopped	No damage to casting
4	Thimble/Body	35,000	43,160	Test Stopped	No damage to casting
5	Pulling Eye	25,000	26,934	Broke out eye	
6	Pulling Eye	25,000	30,934	Broke out eye	
7	Pulling Eye	25,000	31,890	Broke out eye	
8	Pulling Eye	25,000	27,116	Broke out eye	

Mark Wathen
Assoc. Product Engineer
Iron & Fiberglass Div.

Continental Electric Co. • P.O. Box 835 • Trussville, AL 35173
Telephone: 205-655-7400 • Fax: 205-655-2530

Test Report
Liquid Contaminant, Inclined-PlaneTracking and Erosion Test Report
(Per ASTM D 2303)

Abstract
The purpose of this test is to demonstrate the Resistance to Tracking of the Gray High Density Polyethylene (GHDPE) material when used in an outdoor application. This is determined by measuring the material's "Time to Track" in an Incline Plane test fixture.

Procedure

Five (5), 125 mil thick plaque specimen were produced and tested as specified by the ASTM standard. Continuous voltage was applied for the duration of the test. The test was stopped at 1500 minutes.

Incline Plane Testing was performed in accordance to ASTM D 2303 specifications, "Time to Track Method". Specific test settings were; Voltage = 2.5 kV, Resistance = 10 k-ohms, Contaminant Flow Rate = .15 ml/min.

Equipment

Beckman Industrial Test Unit.

Model Number TERT 1A-10

Serial Number 41978

Calibrated: 6/19/2007 and is due 6/19/2008

Results

Material	Blend No.	*Specimen No.*	*Time Under Test*
Hendrix Gray	3573319	1	1500
		2	1500
		3	1500
		4	1500
		5	1500
		Average	1500

Note: No tracking, melting, or burning was present on any of the test specimens.
Hendrix Requirement: The test average must be 1500 minutes or greater with no tracking, melting, or burning present.

Conclusion
Results are stable through 1500 minutes of track testing.

Tested by: Chris Asselin

Reported by: Gary Grenier

Aerial Operations Manager

Reported: October 2, 2007

Coberturas Protectoras LINE-DUC y JUMBO LINE-DUC

Productos para Líneas Aéreas

HENDRIX

Descripción:

Las coberturas protectoras LINE-DUC se sujetan mediante clips sobre conductores desnudos o recubiertos, protegiéndolos así de la abrasión mecánica por ramas y contactos con animales. Están construidas en polietileno negro o gris, resistente al tracking. Se presentan en dos tamaños: Standard y Jumbo

Beneficios:

- Elimina la abrasión del conductor y los contactos a tierra
- Minimiza las interrupciones y costos de reparación
- Prolonga la vida útil de conductores y cables
- Durable, económico y de fácil montaje
- Puede instalarse con herramental para Trabajo con Tensión
- Reduce los costos por podas

Aplicaciones:

Los protectores LINE-DUC se instalan mediante clips sobre conductores desnudos o protegidos, derivaciones y cables de comunicación. En el caso particular del Sistema **Hendrix**, se debe montar sobre el mensajero, cerca de los bornes del transformador, a fin de eliminar cortocircuitos causados por ramas, pájaros o ardillas. El largo standard es de 2,44 metros (8 pies) y el montador lo corta según sus necesidades. Una vez sujeto al conductor mediante los clips, se lo ata en ambos extremos con alambre de atadura para evitar su movimiento longitudinal. **PRECAUCION:** LINE-DUC no debe ser utilizado como cobertura aislada para trabajos con tensión. Al hacer el pedido especificar el color: negro o gris.

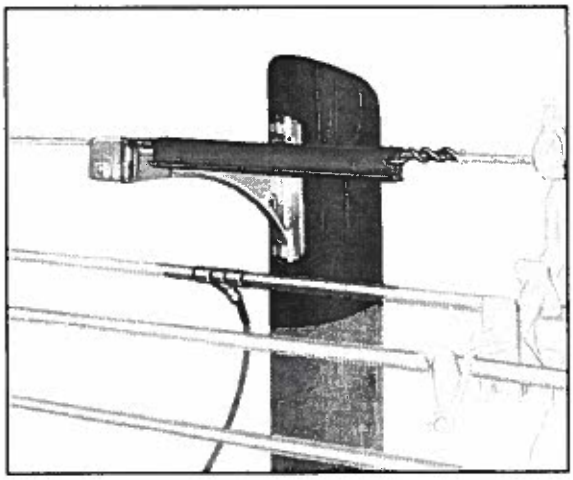

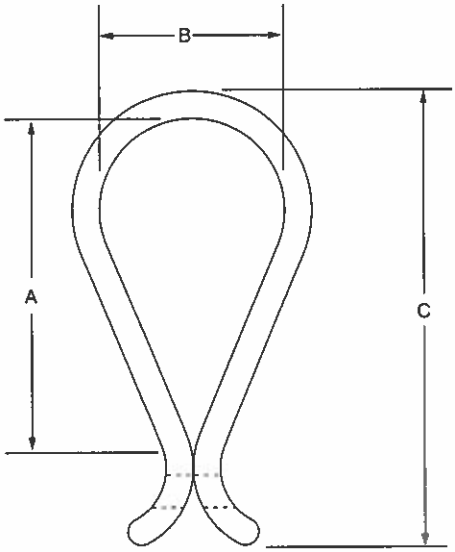

Nro. Catálogo*	Dimensiones mm (pulgadas)			Material	Peso kilos (libras)	Longitud metros (pies)
	A	B	C			
LINE-DUCT	**51** (2)	**25,4** (1)	**66** (2,6)	Polietileno de Alta Densidad	**0,17** (0,38)	**2,44** (8)
JUMBO LINE-DUCT	**76** (3)	**38** (1,5)	**89** (3,5)	Polietileno de Alta Densidad	**0,26** (0,57)	**2,44** (8)

*Al realizar el pedido especifique el color: negro o gris.

Hendrix Wire & Cable, Inc. • 53 Old Wilton Road • Milford, NH 03055-3119 - USA
Teléfono: 1 - (603) 673-2040 • Fax: (603) 673-1497 • Email: overhead@hendrix-wc.com • Website: http://www.hendrix-wc.com
Una Empresa del Grupo Marmon

A6/8

Incoming Inspections

05-May-06

counter:

Inspections.Date: 1/12/2006

PO#: 9804

Inspections.Part#: LINE-DUC GREY

MPS#: 811

Test Performed: Visual

Pass/Fail: Pass

Supplier: SCANDIA

Quantity Received: 600

Sample Size: 5

Inspector: TL

Comments: NO CERTS

counter:

Inspections.Date: 12/13/2005

PO#: 9709

Inspections.Part#: J-LINE DUC

MPS#: 811

Test Performed: Visual

Pass/Fail: Pass

Supplier: SCANDIA

Quantity Received: 162

Sample Size: 5

Inspector: TL

Comments: NO CERTS

Incoming Inspections

05-May-06

counter:

Inspections.Date: 12/13/2005

PO#: 9614

Inspections.Part#: LINE-DUC

MPS#: 811

Test Performed: Visual

Pass/Fail: Pass

Supplier: SCANDIA

Quantity Received: 2520

Sample Size: 5

Inspector: TL

Comments: NO CERTS

counter:

Inspections.Date: 9/13/2005

PO#: 8861

Inspections.Part#: LINE-DUC JUMBO

MPS#: 811

Test Performed: Visual

Pass/Fail: Pass

Supplier: SCANDIA

Quantity Received: 324

Sample Size: 5

Inspector: TL

Comments: NO CERTS

Incoming Inspections

05-May-06

counter:

Inspections.Date: 9/13/2005

PO#: 8861

Inspections.Part#: LINE-DUC-BL

MPS#: 811

Test Performed: Visual

Pass/Fail: Pass

Supplier: SCANDIA

Quantity Received: 1350

Sample Size: 5

Inspector: TL

Comments: NO CERTS

counter:

Inspections.Date: 3/24/2005

PO#: 7646

Inspections.Part#: LINE-DUC JUMBO

MPS#: 811

Test Performed: Visual

Pass/Fail: Pass

Supplier: SCANDIA

Quantity Received: 1500

Sample Size: 5

Inspector: TL

Comments:

Incoming Inspections

05-May-06

counter:

Inspections.Date: 3/24/2005

PO#: 7646

Inspections.Part#: LINE-DUC BLACK

MPS#: 811

Test Performed: Visual

Pass/Fail: Pass

Supplier: SCANDIA

Quantity Received: 3000

Sample Size: 5

Inspector: TL

Comments:

counter:

Inspections.Date: 3/24/2005

PO#: 7646

Inspections.Part#: LINE-DUC GREY

MPS#: 811

Test Performed: Visual

Pass/Fail: Pass

Supplier: SCANDIA

Quantity Received: 600

Sample Size: 5

Inspector: TL

Comments:

Incoming Inspections

05-May-06

counter:	
Inspections.Date:	1/10/2005
PO#:	6844
Inspections.Part#:	J-LINE DUC
MPS#:	811
Test Performed:	Visual
Pass/Fail:	Pass
Supplier:	SCANDIA
Quantity Received:	1620
Sample Size:	5
Inspector:	KC
Comments:	

HENDRIX

Test Report: 35kv Angle Bracket. Catalog Number BA3-35

Test Performed: Mechanical load testing. Yield strength and maximum elastic displacement.

Procedure: All testing was performed by NH Materials Laboratory, Inc. using an Instron 4206 with current certifications on both the frame and the load cell. Refer to the attached diagrams and photographs for load conditions and fixturing. The load rate in all test modes was 0.5"/minute. Due to the ductility of the ASTM a-36 structural steel sections, no load cases were tested to failure. In some instances testing was stopped prior to reaching the maximum elastic load due to unacceptable side loading of the test equipment.

Results:

Load Case	*Description*	*Yield Strength (lb)*	*Displacement (in)*
1-A	Vertical load on top arm of bracket	1700.0	0.40
1-B	Vertical load on bottom arm of bracket	1000.0	0.63
2-A	Transverse load on top arm of bracket	250.0	1.35
2-B	Transverse load on bottom arm of bracket	550.0	1.44

Conclusions:

The following load ratings are established based on the test data. The load rating shall be interpreted as the yield strength of the bracket for a given load case. The yield strength is a discrete point after which any increased load will result in permanent deformation of the bracket.

Vertical load on top arm of bracket	1700.0 lb
Vertical load on bottom arm of bracket	1000.0 lb
Transverse load on top arm of bracket	250.0 lb
Transverse load on bottom arm of bracket	550.0 lb

Kris Psilopoulos
11-15-96

Thomas F. Wilson
Hendrix Wire & Cable, Inc.
V.P. Overhead Products Div.
Date: 9/21/01

NANCY E. GERSKY, Notary Public
My Commission Expires March 22, 2000

NANCY E. GERSKY, NOTARY PUBLIC
MY COMMISSION EXPIRES MARCH 24, 2005

Hendrix Wire & Cable
NHML # 9286

Sample BA3-35

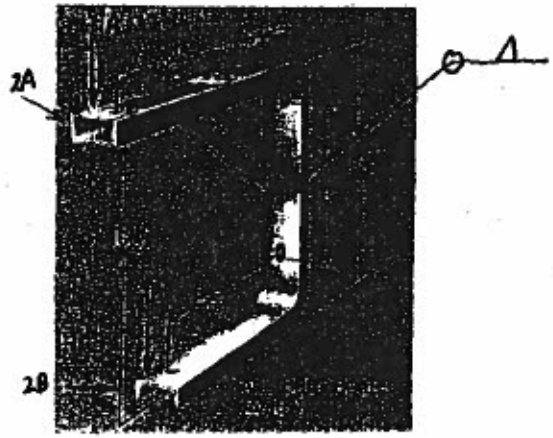

Test ID	Maximum Test Load (lbs)	Maximum Test Displacement (in)	Maximum Elastic Load (lbs)	Maximum Elastic Displacement (in)	Permanent Set After Test (in)
1A	3255.0	1.20	1700.0	0.40	0.40
1B	1542.0	1.09	1000.0	0.63	0.28
2A	368.1	2.01	250.0	1.35	0.07
2B	588.7	1.45	550.0	1.44	0.07

Note: Modes 2A and 2B were stopped early due to unacceptable side loading of load cell.

Nancy E. Gersky
NANCY E. GERSKY, NOTARY PUBLIC
MY COMMISSION EXPIRES MARCH 24, 2005

- Gerente Freinta y Cuatro -
Thomas F. Wilson
Hendrix Wire & Cable, Inc.
V.P. Overhead Products Div.

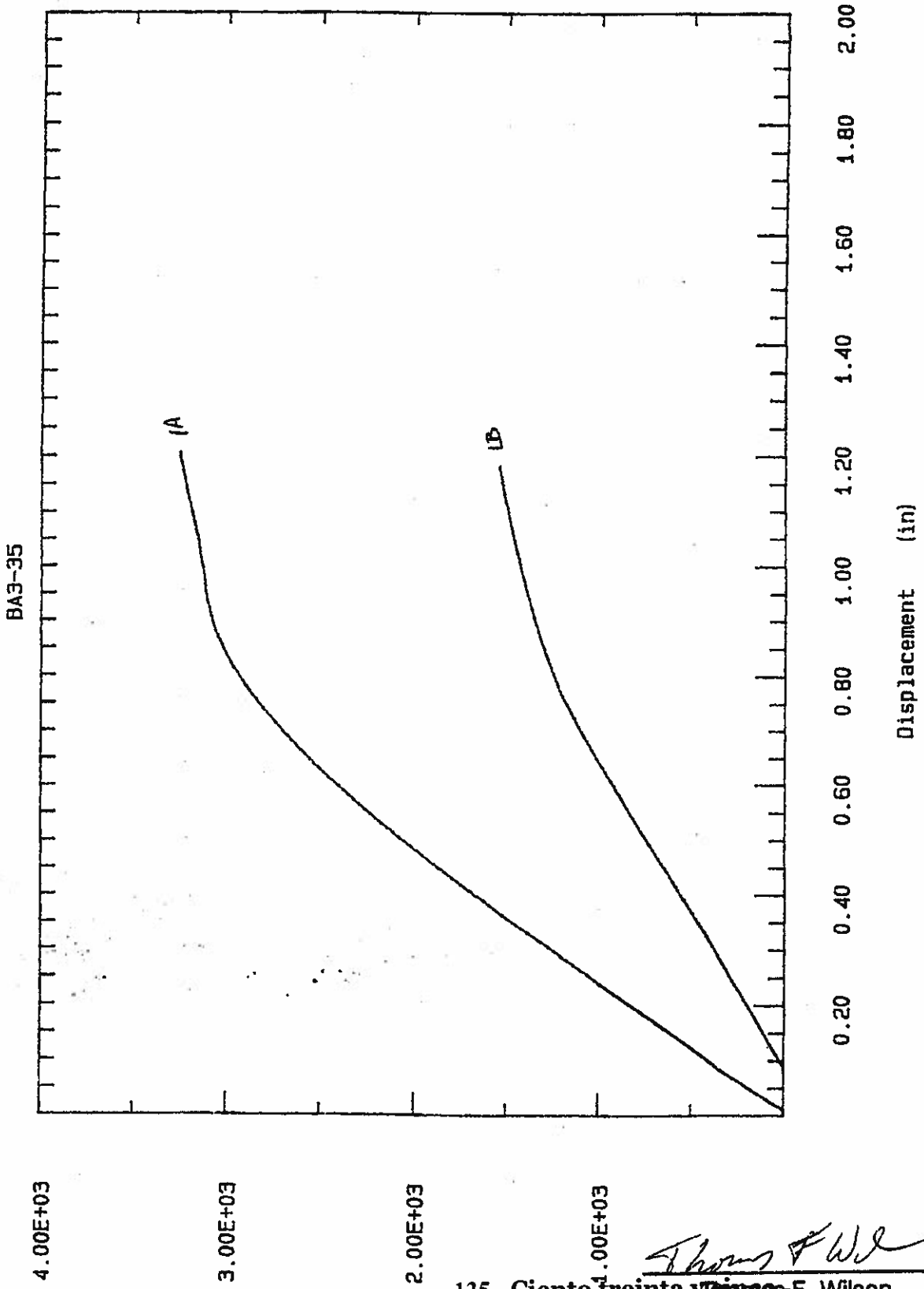

Thomas F. Wilson
Hendrix Wire & Cable, Inc.
V.P. Overhead Products Div.
Date: 9/21/01

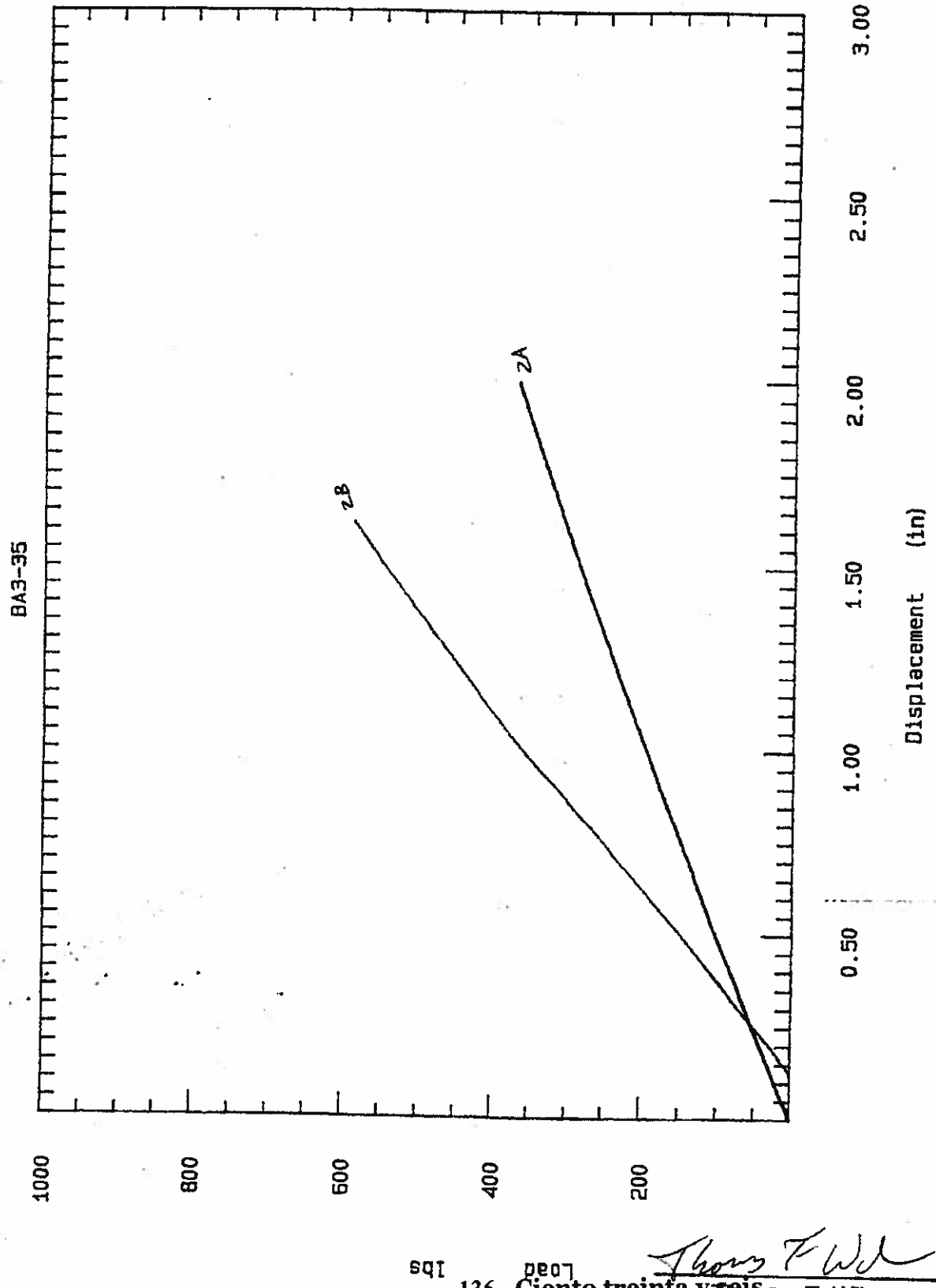

Thomas F. Wilson
Thomas F. Wilson
Hendrix Wire & Cable, Inc.
V.P. Overhead Products Div.
Date: 9/21/01

HENDRIX

Test Report: 35kv Angle Bracket. Catalog Number BA3-35

Test Performed: Mechanical load testing. Yield strength and maximum elastic displacement.

Procedure: All testing was performed by NH Materials Laboratory, Inc. using an Instron 4206 with current certifications on both the frame and the load cell. Refer to the attached diagrams and photographs for load conditions and fixturing. The load rate in all test modes was 0.5"/minute. Due to the ductility of the ASTM a-36 structural steel sections, no load cases were tested to failure. In some instances testing was stopped prior to reaching the maximum elastic load due to unacceptable side loading of the test equipment.

Results:

Load Case	*Description*	*Yield Strength (lb)*	*Displacement (in)*
1-A	Vertical load on top arm of bracket	1700.0	0.40
1-B	Vertical load on bottom arm of bracket	1000.0	0.63
2-A	Transverse load on top arm of bracket	250.0	1.35
2-B	Transverse load on bottom arm of bracket	550.0	1.44

Conclusions:

The following load ratings are established based on the test data. The load rating shall be interpreted as the yield strength of the bracket for a given load case. The yield strength is a discrete point after which any increased load will result in permanent deformation of the bracket.

Vertical load on top arm of bracket	1700.0 lb
Vertical load on bottom arm of bracket	1000.0 lb
Transverse load on top arm of bracket	250.0 lb
Transverse load on bottom arm of bracket	550.0 lb

Kris Psilopoulos
11-15-96

Nancy E. Gersky
NANCY E. GERSKY, Notary Public
My Commission Expires March 22, 2000

Thomas F. Wilson
Hendrix Wire & Cable, Inc.
V.P. Overhead Products Div.
Date: 9/21/01

Nancy E. Gersky
NANCY E. GERSKY, NOTARY PUBLIC
MY COMMISSION EXPIRES MARCH 24, 2005

Hendrix Wire & Cable
NHML # 9286

Sample BA3-35

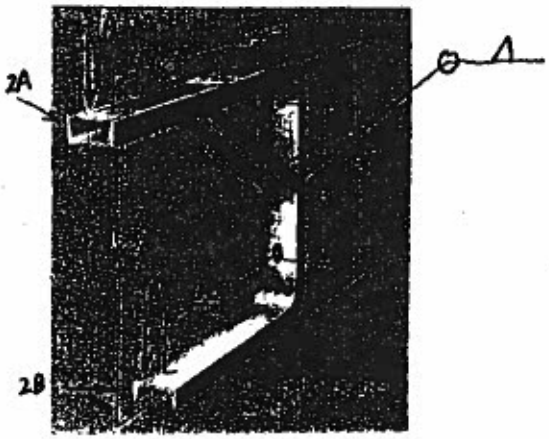

Test ID	Maximum Test Load (lbs)	Maximum Test Displacement (in)	Maximum Elastic Load (lbs)	Maximum Elastic Displacement (in)	Permanent Set After Test (in)
1A	3255.0	1.20	1700.0	0.40	0.40
1B	1542.0	1.09	1000.0	0.63	0.28
2A	368.1	2.01	250.0	1.35	0.07
2B	588.7	1.45	550.0	1.44	0.07

Note: Modes 2A and 2B were stopped early due to unacceptable side loading of load cell.

Nancy E. Gersky
NANCY E. GERSKY, NOTARY PUBLIC
MY COMMISSION EXPIRES MARCH 24 2005

Signature Freitas Vocho
Thomas F. Wilson
Hendrix Wire & Cable, Inc.
V.P. Overhead Products Div.

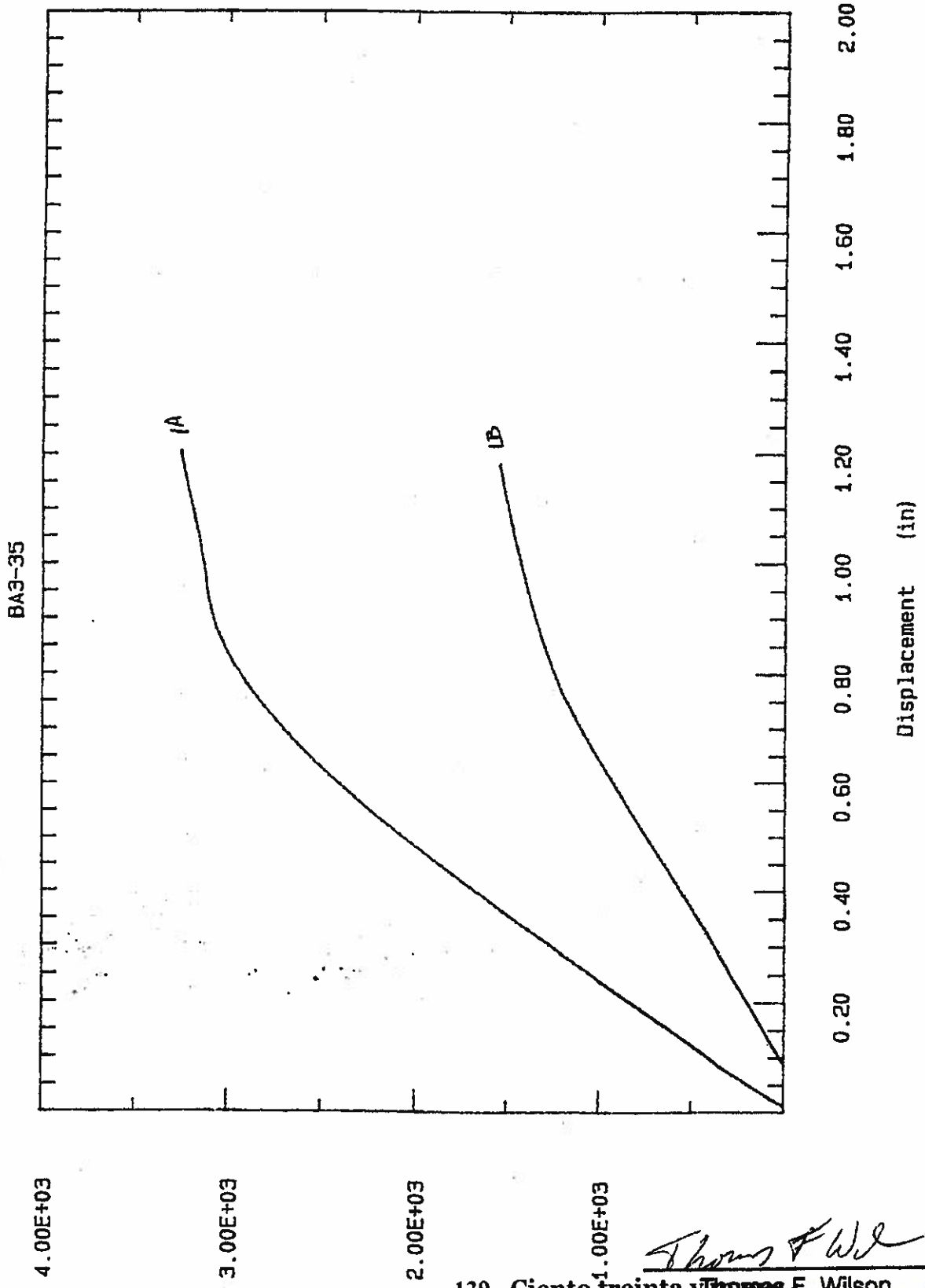

Thomas F. Wilson
Hendrix Wire & Cable, Inc.
V.P. Overhead Products Div.
Date: 9/21/01

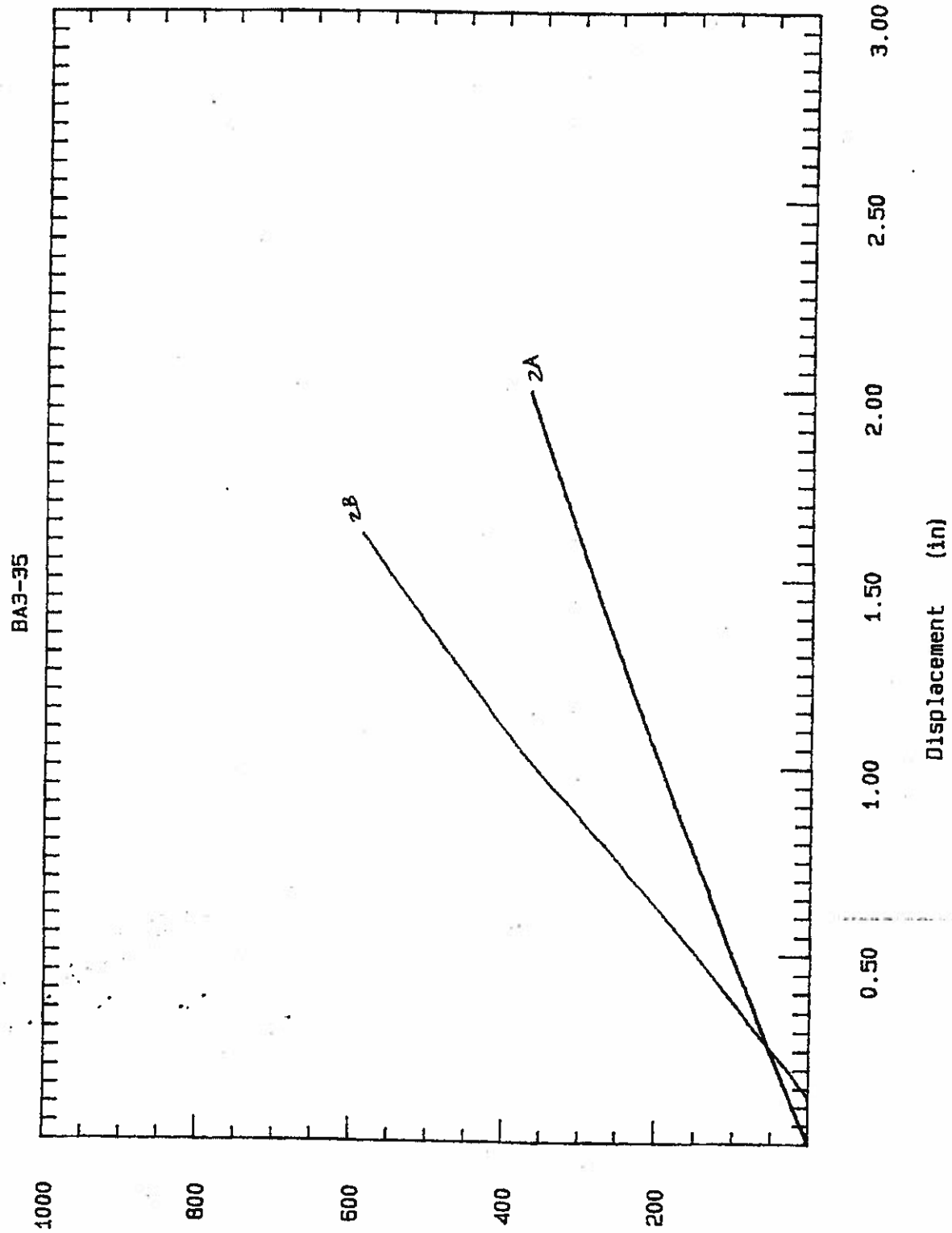

Thomas F Wilson

Thomas F. Wilson
Hendrix Wire & Cable, Inc.
V.P. Overhead Products Div.
Date: 9/21/01

ANDE – 1479/2007

Hendrix Sales Order 23226

Test Report

Date: 4/3/2008

GGrenier

Hendrix Wire and Cable
53 Old Wilton Road
Milford, NH 03055

Test Report

ANDE O/C 7531

Lic. Nbr. 100/2006

August 3, 2006

Gary Grenier
Process Engineer
Tel 603 249 1252
Fax 603 249 1345
email: Ggrenier@Hendrix-wc.com

HENDRIX
Where Power Distribution Reliability Begins.

Routine Test Program

O/C 7531 Quote No. 7463 ANDE Lic. No. 100/2006

Purpose: The purpose of this document is to define the routine test information that Hendrix Wire & Cable, Inc. will provide in order to demonstrate the integrity of the material and equipment that will be supplied.

Integrity of material and equipment provided by Hendrix Wire & Cable, Inc. will be verified by any combination of inspection, test or review of documentation as specified below.

In general, Hendrix Wire & Cable, Inc. designed products procured from subcontractors are purchased in accordance with Material Procurement Standards (MPS), products manufactured at Hendrix Wire & Cable, Inc. are inspected and tested in accordance with Work Instructions (W) or Quality Control Procedures (QC or QRQ) or Process Instruction and catalog items of non - Hendrix Wire & Cable, Inc. design are procured in accordance with the specific supplier's specification sheets. Black track resistant Polyethylene requirements are addressed in the specification governing cable acceptance, material characteristics on a per lot basis and apply to both cable constructions. Grey track resistant polyethylene requirements are addressed in the specification governing insulator acceptance on a per lot basis and apply to all molded components supplied.

Evidence of verification of compliance may be in any combination of electronic or paper media.

The matrix below describes the ANDE Matricula No., Hendrix Wire & Cable, Inc. description, governing inspection document(s), individual or group responsible for carrying out the inspection and method for storage of evidence of compliance.

Gary Grenier
August 3, 2006

ANDE O/C 7531
Lic. No. 100-2006
Quote 7463
Schedule of Tests

Hendrix Description	Governing Hendrix Document(s)	Inspection / Test / Verification Responsibility	Frequency of Test	Recording Media
LINEDUC-BL	MPS 811	Visual/Workmanship/Receiving Inspection	5 Per Lot	Incoming Inspection Reocrd
RTL46	W237	Visual/Workmanship/Production Operator	Each	Work Sheet
	Q.C. 038	Tensile/>19.3MPa/Laboratory Technician	Per Lot	Q.C. Data Base
	Q.C. 038	Elongation/>400%/Laboratory Technician	Per Lot	Q.C. Data Base
Type Test	ASTM 2303	Track Resistance/>1500 min @ 2.5KV/Laboratory Technician	Per Lot	Work Sheet

Gary Grenier

HENDRIX
Where Power Distribution Reliability Begins.

Routine Test Program

CONTRATO: 1479/2007 ANDE SO#23226

Purpose: The purpose of this document is to define the routine test information that Hendrix Wire & Cable, Inc. will provide in order to demonstrate the integrity of the material and equipment that will be supplied.

Integrity of material and equipment provided by Hendrix Wire & Cable, Inc. will be verified by any combination of inspection, test or review of documentation as specified below.

In general, Hendrix Wire & Cable, Inc. designed products procured from subcontractors are purchased in accordance with Material Procurement Standards (MPS), products manufactured at Hendrix Wire & Cable, Inc. are inspected and tested in accordance with Work Instructions (W) or Quality Control Procedures (QC or QRQ) or Process Instruction and catalog items of non - Hendrix Wire & Cable, Inc. design are procured in accordance with the specific supplier's specification sheets. Black track resistant Polyethylene requirements are addressed in the specification governing cable acceptance, material characteristics on a per lot basis and apply to both cable constructions. Grey track resistant polyethylene requirements are addressed in the specification governing insulator acceptance on a per lot basis and apply to all molded components supplied.

Evidence of verification of compliance may be in any combination of electronic or paper media.

The matrix below describes the ANDE Matricula No., Hendrix Wire & Cable, Inc. description, governing inspection document(s), individual or group responsible for carrying out the inspection and method for storage of evidence of compliance.

Gary Grenier
May 1, 2008

ANDE CONTRATO: 1479/2007 Schedule of Tests

Test Schedule
All testing to be
Completed by:

LEGEND.

= Molding & Assembly
= Engineering
= Engineering
= Quality Control
= Quality Control
- Completed During Inspection

ANDE ITEM NO.	ANDE MATRICULA NO.	Hendrix Description	Governing Hendrix Document(s)	Inspection / Test / Verification Responsibility	Frequency of Test	Recording Media	Test Schedule All testing to be Completed by:
1.1.2	403-5030	70mm2 25kv B	ASTM B 400, Q.C.018	Conductor OD/ 9,80mm/Production Operator	Each Reel	Q.C. Data Base	5/1/2008
			SM70AL025B001, QC001	Conductor Shield Thickness/.38mm nom/Production Operator	Each Reel	Q.C. Data Base	5/1/2008
			MPS 200	Conductor Shield Tensile/9.65 Mpa min/Material Vendor	Per Lot	Vendor Certification	5/1/2008
			MPS 200	Conductor Shield Elongation/200% min/Material Vendor	Per Lot	Vendor Certification	5/1/2008
			MPS 200	Conductor Shield Volume Resistivity/>500 ohm-cm/Material Vendor	Per Lot	Vendor Certification	5/1/2008
			SM70AL025B001, QC001	Inner layer Thickness/3,18mm nominal/Production Operator	Each Reel	Q.C. Data Base	5/1/2008
			MPS 302	Inner layer Tensile/12.4 Mpa min/Material Supplier	Per Lot	Vendor Certification	5/1/2008
			MPS 302	Inner layer Elongation/500% min/ Material Supplier	Per Lot	Vendor Certification	5/1/2008
			SM70AL025B001, QC001	Outer layer Minimum point/3,18mm/Production Operator	Each Reel	Q.C. Data Base	5/1/2008
			MPS 314	Outer layer Tensile/20.7 Mpa min/Material Supplier	Per Lot	Vendor Certification	5/1/2008
			MPS 314	Outer layer Elongation/400% min/Material Supplier	Per Lot	Vendor Certification	5/1/2008
			SM70AL025B001, QC018	Finished Cable Diameter/23,27mm +.51mm, -.25mm/Production Operator	Each Reel	Q.C. Data Base	5/1/2008
			SM70AL025B001, QC001	Finished Cable Concentricity/80% Min/Production Operator	Each Reel	Q.C. Data Base	5/1/2008
			ICEA S-61-402	AC Spark Test/25 KV AC/Production Operator	100%	Q.C. Data Base	5/1/2008
		Type Test	ASTM 2303	Track Resistance/>1000 min @ 2.5KV/Laboratory Technician	Per Lot	Work Sheet	5/5/2008 or During Inspection
		Type Test	ICEA S-61-402	U-Bend Discharge/8 hours @ 31Kv/Laboratory Technician	per extrusion run	Work Sheet	5/1/2008
1.1.1	403-5032	185mm2 25kv B	ASTM B 400, Q.C.018	Conductor OD/ 16,1mm/Production Operator	Each Reel	Q.C. Data Base	5/1/2008
			SM185AL025B001, QC001	Conductor Shield Thickness/.38mm nom/Production Operator	Each Reel	Q.C. Data Base	5/1/2008
			MPS 200	Conductor Shield Tensile/9.65 Mpa min/Material Vendor	Per Lot	Vendor Certification	5/1/2008
			MPS 200	Conductor Shield Elongation/200% min/Material Vendor	Per Lot	Vendor Certification	5/1/2008
			MPS 200	Conductor Shield Volume Resistivity/>500 ohm-cm/Material Vendor	Per Lot	Vendor Certification	5/1/2008
			SM185AL025B001, QC001	Inner layer Thickness/3,18mm nominal/Production Operator	Each Reel	Q.C. Data Base	5/1/2008
			MPS 302	Inner layer Tensile/12.4 Mpa min/Material Supplier	Per Lot	Vendor Certification	5/1/2008
			MPS 302	Inner layer Elongation/500% min/ Material Supplier	Per Lot	Vendor Certification	5/1/2008
			SM185AL025B001, QC001	Outer layer Minimum point/3,18mm/Production Operator	Each Reel	Q.C. Data Base	5/1/2008
			MPS 314	Outer layer Tensile/20.7 Mpa min/Material Supplier	Per Lot	Vendor Certification	5/1/2008
			MPS 314	Outer layer Elongation/400% min/Material Supplier	Per Lot	Vendor Certification	5/1/2008
			SM185AL025B001, QC018	Finished Cable Diameter/29,6mm +.51mm, -.25mm/Production Operator	Each Reel	Q.C. Data Base	5/1/2008
			SM185AL025B001, QC001	Finished Cable Concentricity/80% Min/Production Operator	Each Reel	Q.C. Data Base	5/1/2008
			ICEA S-61-402	AC Spark Test/25 KV AC/Production Operator	100%	Q.C. Data Base	5/1/2008
		Type Test	ASTM 2303	Track Resistance/>1000 min @ 2.5KV/Laboratory Technician	Per Lot	Work Sheet	5/5/2008 or During Inspection
		Type Test	ICEA S-61-402	U-Bend Discharge/8 hours @ 31Kv/Laboratory Technician	per extrusion run	Work Sheet	5/1/2008
2.2.1	403-5237	[illegible]02CUSTR-02 (REELS)	CND0002CU007-01, MPS152, QC018	Conductor OD, Production Operator	Each Reel	Q.C. Data Base/ Vendor Certification if Purchased	5/1/2008
3.3.1	0245-5015	[illegible]24A WITH MC2 AND BOLT	W110	Visual/Verification of proper assembly per Attachment A/Production Operator	Each	Work Sheet	5/5/2008 or During Inspection
3.3.2	0245-5016	[illegible]S24F	W093	Visual/Workmanship/Production Operator	Each	Work Sheet	5/1/2008
			Q.C. 038	Tensile/>19,3M/Pull/Laboratory Technician	Per Lot	Q.C. Data Base	5/2/2008
			Q.C. 038	Elongation/>400%/Laboratory Technician	Per Lot	Q.C. Data Base	5/3/2008
		Type Test	ASTM 2303	Track Resistance/>1500 min @ 2.5KV/Laboratory Technician	Per Lot	Work Sheet	5/5/2008 or During Inspection
5.5.1	2533-5038-B	[illegible]P-2	MPS 976	Verification of dimensions 1 - 3/Per MPS 976/Receiving Inspector	5 Per Lot	Incoming Inspection Record	5/1/2008
5.5.2	0023-0120	[illegible]25	W097	Visual/Workmanship/Production Operator	Each	Work Sheet	5/2/2008
			W097	Visual/X-Ray/Production Operator	1 injection cycle/shift;3/day	Work Sheet	5/2/2008
			ORQ001	Electrical/Puncture/Laboratory Technician	12/lot	Excel File	5/5/2008 or During Inspection
			Q.C. 038	Tensile/>19,3M/Pull/Laboratory Technician	Per Lot	Q.C. Data Base	5/1/2008
			Q.C. 038	Elongation/>400%/Laboratory Technician	Per Lot	Q.C. Data Base	5/1/2008
		Type Test	ASTM D2303	Track Resistance/>1500 min @ 2.5KV/Laboratory Technician	Per Lot	Work Sheet	5/5/2008 or During Inspection
		Type Test	ASTM D1693	ESCR 10%Igepal/90% Water,48hrs@50C/No cracks	Per Production Run	Work Sheet	5/1/2008

146 Cód. 0010 Representante seis -

Test Report
Liquid Contaminant, Inclined-PlaneTracking and Erosion Test Report
(Per ASTM D 2303)

Abstract
The purpose of this test is to demonstrate the Resistance to Tracking of the Gray High Density Polyethylene (GHDPE) material when used in an outdoor application. This is determined by measuring the material's "Time to Track" in an Incline Plane test fixture.

Procedure

Five (5), 125 mil thick plaque specimen were produced and tested as specified by the ASTM standard. Continuous voltage was applied for the duration of the test. The test was stopped at 1500 minutes.

Incline Plane Testing was performed in accordance to ASTM D 2303 specifications, "Time to Track Method". Specific test settings were; Voltage = 2.5 kV, Resistance = 10 k-ohms, Contaminant Flow Rate = .15 ml/min.

Equipment

Beckman Industrial Test Unit.

Model Number TERT 1A-10

Serial Number 41978

Results

Material	Blend No.	*Specimen No.*	*Time Under Test*
Hendrix Gray	3310654	1	1500
		2	1500
		3	1500
		4	1500
		5	1500
		Average	1500

Note: No tracking, melting, or burning was present on any of the test specimens.
Hendrix Requirement: The test average must be 1500 minutes or greater with no tracking, melting, or burning present.

Conclusion
Results are stable through 1500 minutes of track testing.

Tested and Reported by: Gary Grenier

Aerial Process Engineer

Date of Test: August 3, 2006

5-2-08

Gupta Permold Corporation

Part Inspection Report

Customer Name: Hendrix Wire & Cable, Inc.

Address: 53 Old Wilton Road, Milford, NH 03055

Contact Person: Nancy Gersky

PO Number: 016789

Material Procurement Standard: MPS #942 Rev ~~9~~ 10, Drawing PF 1031-A

Material: ASTM ~~356~~ A356 Aluminum T61

Part: BM-24A Base

Item	Dimensions Requirement on the Drawing (Inch)	Supplier Measurement Results (Inch) Sample 1	Supplier Measurement Results (Inch) Sample 2	Remarks
A	8.000" +/- .030" Hole Spacing	8.014	8.010	
B	0.781" +/- .030 Hole Diameter	.762	.767	
C	0.438" +/- .030 Hole Diameter	.423	.434	
D	0.813" +/- .030 Hole Diameter	.814	.818	
E	0.781" +/- .030 Slot Width	.809	.807	+ DRAFT
F	0.688" +/- .030 Hole Diameter	.694	.707	

Inspector Name: [illegible]

Inspect Date: 5-2-08

CABLE TECHNOLOGY LABORATORIES, INC.

690 Jersey Avenue — PO Box 707 — Fax: (732) 846-553
New Brunswick, N.J. 08903 Tel: (732) 846-3133
(732) 846-3220

November 4, 2005

Mr. Gary Grenier
Aerial Process Engineer
Hendrix
53 Old Wilton Road
Milford, NH 03055-3119

Report No. 05-113-5

RE: TENSILE STRENGTH AND ULTIMATE ELONGATION

Cable Technology Laboratories has measured tensile strength and ultimate elongation of the compound identified by Hendrix as: Gray High Density Polyethylene.

The measurements were performed in accordance with ICEA S 61 402 Specification and ASTM D 412 Standard using an Electronic Tensile Tester, Model 65TM, manufactured by Thwing-Albert Instrument Company. The tensile tester was calibrated prior to measurements using weights calibrated on 5/16/05.

ASTM Die D was used to cut samples from the polyethylene plaques. Gauge marks were 1 inch apart and the jaw separation speed rate was 2 inch/min.

The results of test are given in the table below.

Specimen Number	Specimen Thickness (mil)	Tensile Strength (psi)		Ultimate Elongation (%)		Result
		Actual	Required	Actual	Required	
1	72	3230	--	525	--	Passed
2	71	2650	--	625	--	
3	70	3520	--	750	--	
Average Value	--	3140	min. 2800	630	min. 400	

Tests supervised and reported by

Bogdan Fryszczyn

Material Procurement Standard – Aerial Cable Accessories

Item:
BM-24A Tangent Bracket

Material:
ASTM A356 Aluminum

Manufacturing Process:
Permanent Mold Casting

Secondary Processes/Treatments:
Heat treat to the T-61 condition

Physical Properties:

Mechanical Strength	Load
Vertical	4000 lb.
Transverse	2300 lb

Critical Features/Dimensions (refer to drawing):

A.) 8.000" +/- .030" Hole Spacing (*)
B.) 0.781" +/- .030" Hole Diameter (*)
C.) 0.438" +/- .030" Hole Diameter (*)
D.) 0.813" +/- .030" Hole Diameter (*)
E.) 0.781" +/- .030" Slot Width (*)
F.) 0.688" +/- .030" Hole Diameter (*)

Acceptance Inspection:
The product shall be free of sharp edges and excess flash.
Web of bracket shall be straight so that there is no deflection along any part of the web.

Changes by Vendor:
No changes will be made to this product by the vendor without first informing the Hendrix Engineering department and obtaining consent.

Certified Reports:
A certified test report showing results of those properties above, marked with an asterisk (*) made on (1) one sample from each lot of material and in accordance with this specification m be submitted to the attention of the Q.C. Manager prior to or with the shipment. The report sl be identified with the Hendrix catalog number, purchase order number and specification num

Approvals:

Q.C. Mgr. _____ Procurement _____ Design Eng. _____ Application Eng. _____

Note: Part Drawing removed for the printing of this document.

Material Procurement Standard – Aerial Cable Accessories

Item:
BAS-24F Anti-sway Bracket

Material:
CH-68 Grey HDPE

Manufacturing Process:
Injection Molded

Secondary Processes/Treatments:
Drilling

Physical Properties:
Not applicable

Critical Features/Dimensions (refer to drawing):
A.) ∅ 0.562" ± 0.031" hole diameter (*)
B.) 0.657" ± 0.031" hole location (*)
C.) 0.650" min. opening (*)
D.) 0.614" ± 0.031" hole location (*)

Acceptance Inspection:
Product shall be of visually uniform cross section and should not exhibit excessive warpage.
The finish shall contain no defects or inconsistencies.
Gates shall be trimmed close to the part.
The date pin shall reflect the month and date of production.

Changes by Vendor:
No changes will be made to this product by the vendor without first informing the Hendrix Engineering department and obtaining consent.

Certified Reports:
A certified test report showing results of those properties above, marked with an asterisk (*) made on (1) one sample from each lot of material and in accordance with this specification must be submitted to the attention of the Q.C. Manager prior to or with the shipment. The report shall be identified with the Hendrix catalog number, purchase order number and specification number.

Approvals:

Q.C. Mgr. _____ Procurement _____ Design Eng. _____ Application Eng. _____

MPS No.	1026	Revision No.	0	Drawing No.	PI 1334-01	Revision Date	7/16/07

Note: Part drawing removed fro the print of this document

HENDRIX

Material Procurement Standard

1. **Reference**

   1.1. ICEA S-66-524 and ICEA S-61-402

2. **Requirements**

   2.1. Test to be conducted on stress relieved molded slabs unless otherwise noted.

Requirements	Test Method	Value
Physical Properties		
* Density	ASTM D 1505	1.13 +/-.02
* Tensile Strength After 7 days @ 100°C (% retention)	ASTM D 638	1400 psi min. 75 min.
* Elongation After 7 days @ 100°C (% retention)	ASTM D 638	200% min. 75 min.
Environmental Stress Cracking No Failures Condition B 10% Igepal	ASTM D 1693	> 7 days
Brittleness Temperature	ASTM D 746	> 7 days < -20°C
* Volatiles @ 105°C (pellets)	ASTM D 3030	.2% max.
Heat Distortion @ 90°C	ASTM D 2633	25% max.
Brabender Plasti-Corder Extrusion Characteristics (pellets)		
Tape Quality	Procedure CLSTM015	Pass
Electrical Properties		
* DC Volume Resistivity (RT to 110°C)	ASTM D 257	< 500 ohm-cm

(*) To be reported in Certificates of Analysis.

3. **Fines**

   3.1. Not to exceed 50 ppm.

4. **Packaging**

   4.1. To be supplied in gaylord boxes utilizing sealed double layer moisture barrier inner liner.

APPROVALS				
Materials Eng.	**Process Eng.**	**Quality Control**	**Cable Eng.**	**Procurement**
C.Richardson	G.Grenier	T.Wilson	E.Laughlin	P.Hilber

REVISION RECORD: 200

Paper Distribution:

- Master copy (801)
- G:\Purchase\MPS\compnd\Semicon\200

Notify Distribution

- Purchasing
- QC
- Process Engineering
- VP/Mgr

Cover Letter:

- Original mailed to Supplier with copy of the MPS
  - Mgr Signature on cover letter
  - Save electronic copy on G:\

HENDRIX

Material Procurement Standard

Material	LLDPE

1. Reference

1.1. ASTM D 1351 and ASTM D 1248, Type 1, Class A, Category 4, Grade E4

2. Requirements

2.1. Test to be conducted on stress relieved molded slabs unless otherwise noted.

Requirements	Test Method	Value
Physical Properties		
* Density	ASTM D 1505	.915 - .923 gm/cc
* Melt Index (pellets)	ASTM D 1238	.5 - .9 gm/10 min.
* Tensile Strength After 48 hrs. @ 100°C (% retention)	ASTM D 638	1800 psi min. 75 min.
* Elongation After 48 hrs. @ 100°C (% retention)	ASTM D 638	500% min. 75 min.
Environmental Stress Cracking No Failures Condition C 10% Igepal	ASTM D 1693	> 96 hrs.
Brittleness Temperature No Failures	ASTM D 746	< -65°C
Electrical Properties		
* Dielectric Constant	ASTM D 150	2.32 max.
* Dissipation Factor	ASTM D 150	.0003 max.
Dielectric Strength	ASTM D 149	550 volts/mil min.

(*) To be reported in Certificates of Analysis.

3. Fines

3.1. Not to exceed 200 ppm.

4. Packaging

4.1. To be supplied in gaylord boxes utilizing sealed double layer moisture barrier inner liner and/or railcar.

APPROVALS				
VP/GM	Mgr of Process Engineering	Quality Control	Cable Engineer	Procurement
D. Carberry	A. Munot	G. Estabrook	R. Bristol	P. Hilber

REVISION RECORD: 302

Paper Distribution:

- Master copy (801)
- G:\Purchase\MPS\compnd\insulation\302

Notify Distribution

- Purchasing
- QC
- Process Engineering
- VP/Mgr

Cover Letter:

- Original mailed to Supplier with copy of the MPS
  - Mgr Signature on cover letter
  - Save electronic copy on G:\

HENDRIX

Material Procurement Standard

1. Reference

1.1. ASTM D 1248, Type III, Class A, Category 4, Grade E9 or J4.

2. Requirements

2.1. Test to be conducted on stress relieved molded slabs unless otherwise noted.

Requirements	Test Method	Value
Physical Properties		
* Density	ASTM D 1505	.947 - .951 gm/cc
* Melt Index (pellets) 190°C/2.16 kg	ASTM D 1238	.6 – 1.0 gm/10 min.
* Tensile Strength After 48 hrs. @ 100°C (% retention)	ASTM D 638	2800 psi min. 75 min.
* Elongation After 48 hrs. @ 100°C (% retention)	ASTM D 638	400% min. 75 min.
Environmental Stress Cracking No Failures Condition B 10% Igepal	ASTM D 1693	> 96 hrs.
Brittleness Temperature	ASTM D 746	-75°C
* Volitiles @ 121°C (pellets)	ASTM D 3030	.01% max.
Electrical Properties		
* Dielectric Constant @ 1 MHz	ASTM D 1531	2.34 max.
* Dissipation Factor @ 1 MHz	ASTM D 1531	.0001 max.
Dielectric Strength	ASTM D 149	550 volts/mil min.
Volume Resistivity @ 23°C	ASTM D 257	> 1 x10^{15} ohm-cm min.

(*) To be reported in Certificates of Analysis.

3. Fines

3.1. Not to exceed 50 ppm.

4. Packaging

4.1. To be supplied in lined Gaylord boxes and bulk railcar.

5. Sampling for Hendrix Testing and Approval

5.1. A 50# sample of resin from the lot will be sent to Hendrix for Puncture testing and approval prior to acceptance.

APPROVALS				
Materials Eng.	**Process Eng.**	**Quality Control**	**Cable Eng.**	**Procurement**
A. Munot	G. Grenier	G. Estabrook	E. Laughlin	P. Hilber

REVISION RECORD: **314**

Paper Distribution:

- Master copy (801)
- G:\Purchase\MPS\compnd\insulation\314

Notify Distribution

- Purchasing
- QC
- Process Engineering
- VP/Mgr

Cover Letter:

- Original mailed to Supplier with copy of the MPS
  - Mgr Signature on cover letter
  - Save electronic copy on G:\

SUBJECT: TIE TOP INSULATOR FAMILY

1 PURPOSE

To provide instructions and quality tests for making HPI-15, HPI-15F, HPI-15FX, HPI-25, HPI-25J, HPI-35 and HPI-35J tie top insulators.

2 APPLICATION

This procedure applies to Molding Room Operators.

3 DEFINITIONS

3.1 Tie Top Insulator:

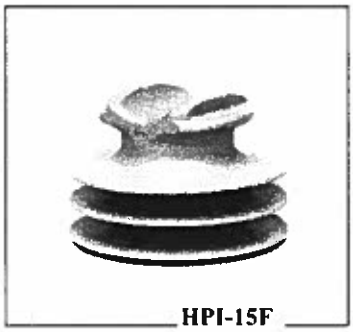

HPI-15F

The tie top insulator is an electrical pin type insulator molded of grey high density polyethylene.

- **HPI-15:** Rated for systems up to 15,000 volts.
- **HPI-15F:** Same characteristics as the HPI-15 except it has a larger neck diameter.
- **HPI-15FX:** Same characteristics as the HPI-15 except it has a larger neck diameter and 1" longer skirt.
- **HPI-25 & HPI-25J:** Rated for systems up to 25,000 volts.
- **HPI-35 & HPI-35J:** Rated for systems up to 35,000 volts.

3.2 Gate: The path plastic material flows in a mold prior to filling the part cavity.

3.3 Threaded Cores: Part hand loaded into mold cavity that plastic flows around to form the inside threads of the insulator.

3.4 Contaminants: Any material that is not homogeneous, (part of and completely mixed into the compound). Contaminants may be solid and appear opaque or darker against compound background.

3.5 Void: A circular or oval space or bubbles in the polyethylene material within the completed part. Voids can appear to be clear and when smaller may appear dark during an x-ray examination.

3.6 Flashing: Excess material on the edge of the part.

3.7 Short Shot: The part has not completely formed.

3.8 Knockout Location: Indents on the part where the ejector pins have released it from the mold. Note: Indent depth should be minimal.