AMENDED
9-16-14

CERTIFIED TEST REPORT NUMBER 34008
INSULATED POWER CABLE RATED 5 TO 35 KV

PURCHASER	Limburg Equities S.A.
PURCHASER'S ORDER #	005/2014
PURCHASER'S PART #	S0185PA25B3-02
CABLE DESCRIPTION	ANDE 03.24.35 Rev2 Al 185mm2 19X PACT 25kV 75
CABLE QUANTITY	171,012 Meters
NUMBER OF REELS	126
DOCUMENT ID	837254000779000
MARMON ORDER NUMBER	055956
REPORT DATE	August 5th, 2014

CERTIFICATION OF TESTS

Gordon D. Estabrook Jr. Mgr. QA & Prod. Eng.
Typewritten Name and Title

SLD 8/5/14

Ing. SEBASTIÁN CABELLO

VR and T&E							
Reel #	Tensile Cond Shield (MPa)	Elongation Cond Shield (%)	Tensile Unaged Insulation (MPa)	Elongation Unaged Insulation (%)	Ten Unaged Jacket (MPa)	Elong Unaged Jacket (MPa)	VRCS - Room Temp (Ocm)
Specs	Min=9.65	Min=200	Min=12.41	Min=500	Min=19.31	Min=400	Max=500
LN7IEL01	11.86	356	16.41	780	24.54	800	41

Aerial Cable Metric									
Reel #	Cond OD mm	Bonding layers	Concentricity (%)	SS Wall Avg mm	Ins Wall Avg mm	Jacket Wall Avg mm	Jacket OD mm	Spark (KV)	DC Resistance 20 (O1K)
Specs	Min=15.95		Min=85 Max=100	Min=.254	Min=2.38	Min=2.36	Min=29.31		Max=.0499
LN7IEL01	16.0020	Pass	98.80	.55	3.3	3.1267	29.5910	Pass	.0480
LN7IEL02	16.0020	Pass	96.10	.49	3.2	3.1547	29.5910	Pass	
LN7IEL03	16.0020	Pass	98.50	.51	3.2	3.1445	29.4894	Pass	
LN7IEL04	15.9766	Pass	98.30	.52	3.2	3.0912	29.5148	Pass	
LN7IEL05	16.0020	Pass	98.50	.52	3.2	3.1394	29.5656	Pass	
LN7IEL06	16.0020	Pass	98.40	.51	3.1	3.2868	29.6672	Pass	
LN7IEL07	16.0020	Pass	98.60	.50	3.2	3.1572	29.5402	Pass	
LN7IEL08	16.0020	Pass	97.40	.48	3.2	3.2156	29.5402	Pass	
LN7IEL09	16.0020	Pass	97.50	.55	3.2	3.1877	29.5656	Pass	
LN7IEL10	16.0020	Pass	98.30	.50	3.1	3.1877	29.5402	Pass	
LN7IEL100	16.0020	Pass	98.20	.55	3.2	3.1623	29.6672	Pass	
LN7IEL101	15.9766	Pass	94.90	.55	3.2	3.1521	29.6418	Pass	
LN7IEL102	15.9766	Pass	96.40	.61	3.1	3.1699	29.6926	Pass	
LN7IEL103	15.9766	Pass	96.00	.56	3.2	3.1471	29.6418	Pass	
LN7IEL104	16.0020	Pass	98.30	.56	3.2	3.1140	29.5910	Pass	
LN7IEL105	16.0020	Pass	98.30	.58	3.2	3.1445	29.4894	Pass	
LN7IEL106	16.0020	Pass	93.30	.57	3.2	3.1801	29.5402	Pass	
LN7IEL107	15.9766	Pass	99.60	.60	3.1	3.1394	29.5402	Pass	
LN7IEL108	15.9766	Pass	95.30	.61	3.1	3.1318	29.5910	Pass	
LN7IEL109	15.9766	Pass	97.30	.58	3.1	3.2385	29.6672	Pass	
LN7IEL11	16.0020	Pass	97.70	.47	3.2	3.1928	29.4640	Pass	
LN7IEL110	15.9766	Pass	93.80	.57	3.3	3.2182	29.6418	Pass	
LN7IEL111	16.0020	Pass	97.40	.52	3.2	3.1471	29.6164	Pass	
LN7IEL112	16.0020	Pass	95.70	.57	3.2	3.1293	29.7180	Pass	

Ing. SEBASTIÁN CABELLO

LN7IEL113	16.0020	Pass	97.80	.52	3.2	3.1242	29.6672	Pass	
LN7IEL114	15.9766	Pass	96.40	.51	3.2	3.1877	29.6418	Pass	
LN7IEL115	16.0020	Pass	96.40	.54	3.2	3.1801	29.6672	Pass	
LN7IEL116	16.0020	Pass	96.50	.52	3.2	3.1445	29.6926	Pass	
LN7IEL117	15.9766	Pass	96.60	.55	3.2	3.1674	29.6418	Pass	
LN7IEL118	16.0020	Pass	98.50	.53	3.2	3.1420	29.6164	Pass	
LN7IEL119	15.9766	Pass	97.70	.54	3.2	3.1242	29.6672	Pass	
LN7IEL12	16.0020	Pass	97.20	.46	3.1	3.2334	29.4640	Pass	
LN7IEL120	15.9766	Pass	96.60	.55	3.2	3.1242	29.7180	Pass	
LN7IEL121	16.0020	Pass	95.50	.53	3.3	3.0937	29.6926	Pass	
LN7IEL122	15.9766	Pass	94.50	.51	3.2	3.1217	29.6672	Pass	
LN7IEL123	16.0020	Pass	98.60	.49	3.2	3.1344	29.6418	Pass	
LN7IEL124	16.0020	Pass	96.60	.50	3.2	3.0963	29.6164	Pass	
LN7IEL125	16.0020	Pass	98.70	.51	3.2	3.1902	29.6418	Pass	
LN7IEL126	16.0020	Pass	92.10	.52	3.2	3.1725	29.6418	Pass	
LN7IEL127	16.0020	Pass	94.80	.51	3.4	3.1115	29.6418	Pass	
LN7IEL13	16.0020	Pass	96.90	.49	3.2	3.2029	29.5402	Pass	
LN7IEL14	16.0020	Pass	97.90	.50	3.2	3.1369	29.5148	Pass	
LN7IEL15	16.0020	Pass	96.40	.51	3.1	3.2385	29.4640	Pass	
LN7IEL16	16.0020	Pass	98.50	.47	3.1	3.2233	29.4640	Pass	
LN7IEL17	16.0020	Pass	94.80	.52	3.2	3.1344	29.5148	Pass	
LN7IEL18	16.0020	Pass	98.10	.48	3.2	3.1648	29.4640	Pass	
LN7IEL19	16.0020	Pass	97.40	.51	3.2	3.1725	29.4640	Pass	
LN7IEL20	16.0020	Pass	98.80	.49	3.2	3.1140	29.4640	Pass	
LN7IEL21	16.0020	Pass	96.10	.89	3.2	3.1572	29.4640	Pass	
LN7IEL22	16.0020	Pass	97.50	.48	3.2	3.1775	29.5656	Pass	
LN7IEL23	16.0020	Pass	95.10	.53	3.1	3.2207	29.5402	Pass	
LN7IEL24	16.0020	Pass	96.00	.48	3.2	3.1572	29.5656	Pass	
LN7IEL25	16.0020	Pass	98.70	.51	3.2	3.1623	29.5910	Pass	
LN7IEL26	16.0020	Pass	97.30	.53	3.2	3.1902	29.5402	Pass	
LN7IEL27	16.0020	Pass	96.20	.52	3.2	3.1775	29.6418	Pass	
LN7IEL28	16.0020	Pass	96.20	.51	3.2	3.1471	29.5910	Pass	
LN7IEL29	16.0020	Pass	97.60	.50	3.2	3.1445	29.6418	Pass	
LN7IEL30	16.0020	Pass	96.40	.51	3.3	3.1521	29.6672	Pass	
LN7IEL31	15.9766	Pass	98.10	.55	3.2	3.0810	29.3878	Pass	
LN7IEL32	15.9766	Pass	96.50	.54	3.2	3.1979	29.6672	Pass	
LN7IEL33	16.0020	Pass	95.80	.56	3.2	3.0658	29.6672	Pass	
LN7IEL34	15.9766	Pass	95.20	.59	3.2	3.0759	29.5656	Pass	
LN7IEL35	15.9766	Pass	94.80	.59	3.1	2.9718	29.6164	Pass	
LN7IEL36	16.0020	Pass	96.70	.55	3.2	3.0404	29.5656	Pass	

Ing. SERGIO CABELLO
Responsable Local

LN7IEL37	16.0020	Pass	96.10	.59	3.1	3.0912	29.5402	Pass	
LN7IEL38	16.0020	Pass	98.60	.56	3.2	3.0582	29.5656	Pass	
LN7IEL39	16.0020	Pass	94.50	.58	3.1	3.0582	29.5910	Pass	
LN7IEL40	16.0020	Pass	95.50	.57	3.2	3.1039	29.4894	Pass	
LN7IEL41	16.0020	Pass	97.30	.54	3.2	3.1039	29.4894	Pass	
LN7IEL42	16.0020	Pass	97.50	.56	3.2	3.0709	29.5148	Pass	
LN7IEL43	15.9766	Pass	97.60	.53	3.2	3.0988	29.5910	Pass	
LN7IEL44	16.0020	Pass	97.30	.53	3.2	3.0937	29.6672	Pass	
LN7IEL45	15.9766	Pass	98.30	.54	3.2	3.0861	29.5910	Pass	
LN7IEL46	16.0020	Pass	95.20	.54	3.2	3.1064	29.5910	Pass	
LN7IEL47	16.0020	Pass	96.30	.52	3.3	3.0785	29.6164	Pass	
LN7IEL48	16.0020	Pass	99.00	.54	3.2	3.0963	29.6164	Pass	
LN7IEL49	16.0020	Pass	97.50	.53	3.3	3.0658	29.6164	Pass	
LN7IEL50	16.0020	Pass	98.80	.54	3.2	3.0937	29.5402	Pass	
LN7IEL51	16.0020	Pass	98.30	.55	3.2	3.0759	29.4894	Pass	
LN7IEL52	15.9766	Pass	97.50	.53	3.2	3.1318	29.6164	Pass	
LN7IEL53	16.0020	Pass	94.90	.54	3.2	3.2283	29.5656	Pass	
LN7IEL54	16.0020	Pass	96.90	.56	3.2	3.1242	29.5910	Pass	
LN7IEL55	15.9766	Pass	95.00	.53	3.2	3.0734	29.6164	Pass	
LN7IEL56	16.0020	Pass	96.50	.51	3.1	3.1775	29.6672	Pass	
LN7IEL57	16.0020	Pass	97.40	.52	3.2	3.0861	29.6672	Pass	
LN7IEL58	16.0020	Pass	96.30	.49	3.2	3.1928	29.6164	Pass	
LN7IEL59	15.9766	Pass	97.20	.52	3.1	3.1979	29.5910	Pass	
LN7IEL60	16.0020	Pass	98.90	.51	3.1	3.1801	29.6164	Pass	
LN7IEL61	16.0020	Pass	95.30	.54	3.1	3.1521	29.5402	Pass	
LN7IEL62	16.0020	Pass	96.50	.51	3.1	3.1852	29.6164	Pass	
LN7IEL63	16.0020	Pass	97.60	.52	3.2	3.1267	29.6672	Pass	
LN7IEL64	16.0020	Pass	97.40	.54	3.2	3.1242	29.6672	Pass	
LN7IEL65	16.0020	Pass	98.60	.55	3.2	3.1090	29.5910	Pass	
LN7IEL66	15.9766	Pass	95.70	.54	3.1	3.2131	29.6926	Pass	
LN7IEL67	16.0020	Pass	96.10	.55	3.2	3.1750	29.7180	Pass	
LN7IEL68	15.9766	Pass	98.20	.54	3.2	3.1496	29.6672	Pass	
LN7IEL69	15.9766	Pass	98.40	.55	3.2	3.1547	29.6418	Pass	
LN7IEL70	16.0020	Pass	99.20	.55	3.2	3.2055	29.6672	Pass	
LN7IEL71	15.9766	Pass	95.00	.57	3.2	3.1775	29.6926	Pass	
LN7IEL72	16.0020	Pass	90.60	.56	3.1	3.2131	29.6672	Pass	
LN7IEL73	16.0020	Pass	98.20	.57	3.2	3.1471	29.7434	Pass	
LN7IEL74	16.0020	Pass	98.80	.53	3.1	3.2283	29.6418	Pass	
LN7IEL75	15.9766	Pass	97.90	.53	3.2	3.1369	29.6672	Pass	
LN7IEL76	15.9766	Pass	98.00	.55	3.1	3.1623	29.6672	Pass	

LN7IEL77	16.0020	Pass	96.50	.56	3.1	3.2334	29.6164	Pass	
LN7IEL78	16.0020	Pass	98.80	.56	3.2	3.1471	29.5656	Pass	
LN7IEL79	16.0020	Pass	98.30	.54	3.1	3.1242	29.6164	Pass	
LN7IEL80	16.0020	Pass	98.70	.55	3.2	3.1166	29.6418	Pass	
LN7IEL81	15.9766	Pass	96.90	.53	3.2	3.1217	29.5910	Pass	
LN7IEL82	15.9766	Pass	98.70	.56	3.2	3.1547	29.6672	Pass	
LN7IEL83	15.9766	Pass	96.50	.56	3.1	3.2258	29.5910	Pass	
LN7IEL84	16.0020	Pass	96.90	.52	3.2	3.1953	29.6418	Pass	
LN7IEL85	16.0020	Pass	98.20	.56	3.2	3.1623	29.6672	Pass	
LN7IEL86	15.9766	Pass	98.10	.52	3.2	3.1369	29.6926	Pass	
LN7IEL87	16.0020	Pass	97.60	.54	3.2	3.1344	29.6672	Pass	
LN7IEL88	15.9766	Pass	98.70	.56	3.2	3.1801	29.6672	Pass	
LN7IEL89	16.0020	Pass	96.70	.55	3.1	3.1826	29.5910	Pass	
LN7IEL90	16.0020	Pass	98.10	.53	3.2	3.1420	29.5910	Pass	
LN7IEL91	15.9766	Pass	95.90	.55	3.2	3.1115	29.6672	Pass	
LN7IEL92	15.9766	Pass	97.70	.52	3.2	3.0988	29.6418	Pass	
LN7IEL94	15.9766	Pass	98.20	.53	3.2	3.1598	29.6418	Pass	
LN7IEL95	16.0020	Pass	98.00	.56	3.2	3.1090	29.6164	Pass	
LN7IEL96	15.9766	Pass	96.50	.55	3.2	3.1572	29.7180	Pass	
LN7IEL97	16.0020	Pass	95.90	.54	3.2	3.1267	29.7180	Pass	
LN7IEL98	16.0020	Pass	97.00	.54	3.2	3.1344	29.7180	Pass	
LN7IEL99	16.0020	Pass	98.70	.53	3.2	3.1115	29.6164	Pass	

Inventory Report			
Reel #	Total Meters	Top	Drum
LN7IEL01	1363	4953227	4951864
LN7IEL02	1356	4954585	4953229
LN7IEL03	1356	4955942	4954586
LN7IEL04	1356	4957299	4955943
LN7IEL05	1356	4958656	4957300
LN7IEL06	1356	4960014	4958658
LN7IEL07	1356	4961408	4960052
LN7IEL08	1356	4962765	4961409
LN7IEL09	1356	4964122	4962766
LN7IEL10	1356	4965479	4964123
LN7IEL100	1327	5087828	5086501
LN7IEL101	1359	5089191	5087832
LN7IEL102	1359	5090551	5089192
LN7IEL103	1365	5091917	5090552

Ing. SEBASTIÁN CARELLO

LN7IEL104	1359	5093280	5091921
LN7IEL105	1359	5094640	5093281
LN7IEL106	1359	5096000	5094641
LN7IEL107	1359	5097360	5096001
LN7IEL108	1359	5097360	5096001
LN7IEL109	1362	5100083	5098721
LN7IEL11	1356	4966836	4965480
LN7IEL110	1359	5101449	5100090
LN7IEL111	1359	5102809	5101450
LN7IEL112	1356	5104173	5102817
LN7IEL113	1356	5105530	5104174
LN7IEL114	1356	5106887	5105531
LN7IEL115	1356	5108244	5106888
LN7IEL116	1356	5109601	5108245
LN7IEL117	1366	5110968	5109602
LN7IEL118	1356	5112328	5110972
LN7IEL119	1356	5113685	5112329
LN7IEL12	1356	4968193	4966837
LN7IEL120	1356	5115042	5113686
LN7IEL121	1356	5116399	5115043
LN7IEL122	1356	5117756	5116400
LN7IEL123	1356	5119113	5117757
LN7IEL124	1356	5120482	5119126
LN7IEL125	1356	5121839	5120483
LN7IEL126	1356	5123196	5121840
LN7IEL127	1356	5124573	5123217
LN7IEL13	1356	4969610	4968254
LN7IEL14	1356	4970967	4969611
LN7IEL15	1356	4972324	4970968
LN7IEL16	1356	4973681	4972325
LN7IEL17	1356	4975094	4973738
LN7IEL18	1356	4976451	4975095
LN7IEL19	1356	4977826	4976470
LN7IEL20	1356	4979183	4977827
LN7IEL21	1356	4980540	4979184
LN7IEL22	1356	4981897	4980541
LN7IEL23	1356	4983254	4981898
LN7IEL24	1356	4984611	4983255
LN7IEL25	1356	4986045	4984689
LN7IEL26	1356	4987402	4986046

Ing. SEBASTIÁN ARBELLO
Apoderado Legal

LN7IEL27	1356	4988759	4987403
LN7IEL28	1356	4990116	4988760
LN7IEL29	1356	4991473	4990117
LN7IEL30	1356	4992830	4991474
LN7IEL31	1356	4994260	4992904
LN7IEL32	1356	4995793	4994437
LN7IEL33	1356	4997150	4995794
LN7IEL34	1356	4998507	4997151
LN7IEL35	1356	4999864	4998508
LN7IEL36	1356	5001221	4999865
LN7IEL37	1356	5002578	5001222
LN7IEL38	1356	5003935	5002579
LN7IEL39	1356	5005292	5003936
LN7IEL40	1356	5006649	5005293
LN7IEL41	1358	5008008	5006650
LN7IEL42	1356	5009368	5008012
LN7IEL43	1356	5010725	5009369
LN7IEL44	1356	5012082	5010726
LN7IEL45	1356	5013439	5012083
LN7IEL46	1356	5014796	5013440
LN7IEL47	1359	5016156	5014797
LN7IEL48	1356	5017516	5016160
LN7IEL49	1356	5018873	5017517
LN7IEL50	1356	5020230	5018874
LN7IEL51	1356	5021587	5020231
LN7IEL52	1356	5022944	5021588
LN7IEL53	1364	5024309	5022945
LN7IEL54	1356	5025668	5024312
LN7IEL55	1356	5027025	5025669
LN7IEL56	1356	5028382	5027026
LN7IEL57	1356	5029739	5028383
LN7IEL58	1356	5031096	5029740
LN7IEL59	1363	5032460	5031097
LN7IEL60	1356	5033820	5032464
LN7IEL61	1356	5035177	5033821
LN7IEL62	1356	5036534	5035178
LN7IEL63	1356	5037891	5036535
LN7IEL64	1356	5039248	5037892
LN7IEL65	1356	5040605	5039249
LN7IEL66	1360	5041966	5040606

Ing.

LN7IEL67	1356	5043327	5041971
LN7IEL68	1356	5044684	5043328
LN7IEL69	1356	5046041	5044685
LN7IEL70	1356	5047398	5046042
LN7IEL71	1357	5048756	5047399
LN7IEL72	1363	5050120	5048757
LN7IEL73	1356	5051480	5050124
LN7IEL74	1356	5052837	5051481
LN7IEL75	1357	5054195	5052838
LN7IEL76	1356	5055552	5054196
LN7IEL77	1356	5056909	5055553
LN7IEL78	1364	5058274	5056910
LN7IEL79	1356	5059633	5058277
LN7IEL80	1356	5060990	5059634
LN7IEL81	1356	5062347	5060991
LN7IEL82	1356	5063704	5062348
LN7IEL83	1356	5065061	5063705
LN7IEL84	1363	5066425	5065062
LN7IEL85	1356	5067785	5066429
LN7IEL86	1356	5069142	5067786
LN7IEL87	1356	5070499	5069143
LN7IEL88	1356	5071856	5070500
LN7IEL89	1356	5073213	5071857
LN7IEL90	1363	5074577	5073214
LN7IEL91	1359	5075940	5074581
LN7IEL92	1359	5077300	5075941
LN7IEL94	1362	5079698	5078336
LN7IEL95	1358	5081060	5079702
LN7IEL96	1359	5082420	5081061
LN7IEL97	1359	5083780	5082421
LN7IEL98	1359	5085140	5083781
LN7IEL99	1359	5086500	5085141

Ing. SEBASTIAN CARELLO
Representante

Test Report
U-Bend

Abstract

The purpose of the testing was to meet or exceed the ANSI requirement of 125 v/mil for 6 hours.

Procedure

A cable sample was bent around a mandrel which was 8x the diameter of the cable and secured in that position. The bent cable was placed on a grounded metal plate. The conductor was exposed on the two cable ends and attached to high voltage. High voltage was applied at 31 kV for 6 hours.

Specification

ANSI Standard Number S-61-402

Cable Description

Reel Numbers:	(35mm2)	LN7EXG01
	(70mm2)	LN7EXD01
	(185mm2)	LN7EXB01

Results

The cable tested meet the requirements of ANSI S-61-402. No failures occurred.

Operations Manager

Date: 12/02/2009

Ing. SEBASTIAN CABELLO
Representante Legal

CABLE TECHNOLOGY LABORATORIES, INC.

690 Jersey Avenue — P.O. Box 707 — New Brunswick, N.J 08903
Fax: (732) 846-5531
Tel: (732) 846-3133
(732) 846-3220-1

December 1, 2005

Mr. Gary Grenier
Aerial Process Engineer
Hendrix
53 Old Wilton Road
Milford, NH 03055-3119

Report No. 05-113-10

RE: LIQUID-CONTAMINANT, INCLINED-PLANE TRACKING

Cable Technology Laboratories has performed Liquid-Contaminant, Inclined-Plane Tracking and Erosion test on the compound identified by Hendrix as: Black High Density Polyethylene.

The test was performed fully in accordance with ASTM D 2303 Standard Method. The contaminant solution had a resistivity of 400 Ωcm at 24 °C and its rate of application was 0.15 ml/min. A constant ac voltage of 2500 V was applied between electrodes. None of the samples failed during testing.

The test results are given in the following table.

Specimen Designation	Average Thickness (mils)	Time Under Test (hour)	Results	Observations
A	122	33	Pass	Minimal tracking
B	122	25	Pass	Minimal tracking
C	118	25	Pass	Minimal tracking
D	115	43	Pass	Minimal tracking
E	123	43	Pass	Minimal tracking

The minimum required number of hours to pass was 25 hours.

The column headed "Time Under Test (hour)" indicates the number of hours after which the test was terminated.

Tests supervised and reported by

Bogdan Fryszczyn
VP – Research

Ing. SEBASTIÁN CABELLO
Representante Legal

CABLE TECHNOLOGY LABORATORIES, INC.

690 Jersey Avenue — P.O. Box 707 — New Brunswick, N.J. 08903
Fax: (732) 846-5531
Tel: (732) 846-3133
(732) 846-3220-1

November 4, 2005

Mr. Gary Grenier
Aerial Process Engineer
Hendrix
53 Old Wilton Road
Milford, NH 03055-3119

Report No. 05-113-7

RE: TENSILE STRENGTH AND ULTIMATE ELONGATION

Cable Technology Laboratories has measured tensile strength and ultimate elongation of the compound identified by Hendrix as: Black Blend High Density Polyethylene.

The measurements were performed in accordance with ICEA S 61 402 Specification and ASTM D 412 Standard using an Electronic Tensile Tester, Model 65TM, manufactured by Thwing-Albert Instrument Company. The tensile tester was calibrated prior to measurements using weights calibrated on 5/16/05.

ASTM Die D was used to cut samples from the polyethylene plaques. Gauge marks were 1 inch apart and the jaw separation speed rate was 2 inch/min.

The results of test are given in the table below.

Specimen Number	Specimen Thickness (mil)	Tensile Strength (psi)		Ultimate Elongation (%)		Result
		Actual	Required	Actual	Required	
1	64	3430	--	650	--	Passed
2	63	3370	--	750	--	
3	63	3280	--	520	--	
Average Value	--	3360	min. 2800	640	min. 400	

Tests supervised and reported by

Bogdan Pryszczyn
VP – Research

Ing. SEBASTIÁN CONSELLO

PLASTICS TECHNOLOGY LABORATORIES, INC.

Testing	:	Environmental Stress-Cracking of Ethylene Plastics
Test Method	:	ASTM D1693-01 per ASTM D1248-02, Section 11.1.8.3 - **Modified ****
Project Number	:	P20051652 Purchase Order # : 9258
Customer	:	Hendrix Wire & Cable, Inc.
Attention	:	Gary Grenier
Analyst	:	S. Polastri
Date	:	September 30, 2005

Material	:	**High Density Polyethylene**
Sample Preparation	:	Plaques tested as received from customer - conditioning time waived**
Specimen Preparation	:	ESCR specimens were die cut and nicked by PTLI
Reagent	:	Igepal CO-630
Reagent Strength	:	**10% by volume**
Test Condition	:	B
Notch Depth	:	0.012 - 0.015 in.
Bath Temperature	:	50°C
Test Duration	:	**48 Hours**

Sample ID	:	**Black High Density Polyethylene Blend**
% Sample Failure at Test Duration	:	0 48 Hours

Plastics Technology Laboratories, Inc. reports are issued for the exclusive use of the clients to whom they are addressed. No quotations from reports or use of the Plastics Technology Laboratories, Inc. name is permitted except as expressly authorized in writing. Letters and reports apply only to the specific materials, products or processes tested, examined or surveyed and are not necessarily indicative of the qualities of apparently similar or identical products or processes. The liability of Plastics Technology Laboratories, Inc. with respect to services rendered shall be limited to the amount of consideration paid for such services and not include any consequential damages.

50 Pearl Street, Pittsfield, MA 01201
Phone (413) 499-0983, Fax 499-2339
http://www.ptli.com

CABLE TECHNOLOGY LABORATORIES, INC.

690 Jersey Avenue — P.O. Box 707 — Fax: (732) 846-5531
New Brunswick, N.J. 08903 Tel: (732) 846-3133
(732) 846-3220-1

October 27, 2005

Mr. Gary Grenier
Aerial Process Engineer
Hendrix
53 Old Wilton Road
Milford, NH 03055-3119

Report No. 05-113-4

RE: RESISTIVITY MEASUREMENTS

Cable Technology Laboratories has measured the volume resitivity of the conductor shield of the cable with 636 kcmil aluminum compact conductor.

The measurements were performed in accordance with ICEA S 61 402 Specification using Fluke 891 V multimeter, last calibrated on 7/19/05

The results are given in the table below.

	Measured	ICEA Limit	Results
Resistivity of conductor shield at 90 °C (ohm · m)	0.87	max. 1000	Passed
Resistivity of conductor shield at 130 °C (ohm · m)	1.6	max. 1000	

Prepared by:

Bogdan Fryszczyn

Ing. SEBASTIÁN ARELLO

Marmon Utility LLC MARMON Hendrix

53 Old Wilton Road, Milford, NH 03055

CERTIFIED TEST REPORT NUMBER 36747
INSULATED POWER CABLE RATED 5 TO 35 KV

PURCHASER	Limburg Equities S.A.
PURCHASER'S ORDER #	038-2016 /LPI ANDE No 1205/16
PURCHASER'S PART #	Limberg Equities S.A.
CABLE DESCRIPTION	ANDE 03.24.25 REV. 2 Al 185mm2 19X PACT 25kV 75 3LYR
CABLE QUANTITY	101,982 Meters
NUMBER OF REELS	69
DOCUMENT ID	125681000779a01
MARMON ORDER NUMBER	069088
REPORT DATE	December 22nd, 2016

CERTIFICATION OF TESTS

J, Douglas Batty Mgr. QA & Prod. Eng.
Typewritten Name and Title

SLD 12/22/16

Ing. SEBASTIÁN CANELLO

Aerial Cable Metric									
Reel #	Cond OD mm	Bonding layers	Concentricity (%)	SS Wall Avg mm	Ins Wall Avg mm	Jacket Wall Avg mm	Jacket OD mm	Spark (KV)	DC Resistance 20 (O1K)
Specs	Min=15.95		Min=85 Max=100	Min=.254	Min=2.38	Min=2.38	Min=29.31		Max=.0483
LN7JZE01	16.0020	Pass	97.00	.43	3.3	3.1572	29.5910	Pass	
LN7JZE02	16.0020	Pass	97.10	.43	3.3	3.1801	29.7180	Pass	.0471
LN7JZE03	16.0020	Pass	96.00	.39	3.3	3.2207	29.7688	Pass	
LN7JZE04	16.0020	Pass	97.00	.41	3.3	3.2258	29.6926	Pass	
LN7JZE05	16.0020	Pass	97.50	.39	3.2	3.2715	29.7180	Pass	
LN7JZE06	16.0020	Pass	97.50	.41	3.2	3.2588	29.6418	Pass	
LN7JZE07	16.0020	Pass	97.90	.40	3.2	3.2461	29.6672	Pass	
LN7JZE08	16.0020	Pass	91.00	.39	3.3	3.2334	29.6672	Pass	
LN7JZE09	16.0020	Pass	93.30	.37	3.5	3.1623	29.7180	Pass	
LN7JZE10	16.0020	Pass	93.70	.41	3.4	3.2055	29.6926	Pass	
LN7JZE11	16.0020	Pass	91.00	.40	3.3	3.2385	29.6926	Pass	
LN7JZE12	16.0020	Pass	96.00	.39	3.3	3.1725	29.7180	Pass	
LN7JZE13	16.0020	Pass	93.00	.41	3.4	3.1801	29.7180	Pass	
LN7JZE14	16.0020	Pass	95.20	.38	3.3	3.1979	29.7180	Pass	
LN7JZE15	16.0020	Pass	95.50	.38	3.3	3.1928	29.7434	Pass	
LN7JZE16	16.0020	Pass	95.90	.40	3.3	3.2106	29.7180	Pass	
LN7JZE17	16.0020	Pass	95.80	.40	3.3	3.1648	29.7434	Pass	
LN7JZE18	16.0020	Pass	93.80	.38	3.3	3.1953	29.6672	Pass	
LN7JZE19	16.0020	Pass	96.00	.40	3.3	3.1420	29.7180	Pass	
LN7JZE20	16.0274	Pass	96.80	.41	3.3	3.2055	29.7688	Pass	
LN7JZE21	16.0020	Pass	95.90	.40	3.3	3.2004	29.6418	Pass	
LN7JZE22	16.0020	Pass	94.70	.41	3.3	3.1902	29.7434	Pass	
LN7JZE23	16.0274	Pass	95.00	.37	3.3	3.2080	29.6672	Pass	
LN7JZE24	16.0020	Pass	97.00	.39	3.3	3.1953	29.7688	Pass	
LN7JZE25	16.0274	Pass	91.00	.42	3.2	3.1953	29.7180	Pass	
LN7JZE26	16.0020	Pass	96.50	.40	3.3	3.2156	29.7180	Pass	
LN7JZE27	16.0020	Pass	95.90	.38	3.2	3.2461	29.7180	Pass	
LN7JZE28	16.0020	Pass	95.30	.39	3.2	3.2410	29.7180	Pass	
LN7JZE29	16.0020	Pass	96.60	.39	3.3	3.1852	29.7180	Pass	
LN7JZE30	16.0020	Pass	96.50	.38	3.2	3.2537	29.7434	Pass	
LN7JZE31	16.0020	Pass	98.60	.40	3.3	3.1852	29.7434	Pass	
LN7JZE32	16.0020	Pass	98.80	.40	3.3	3.2360	29.7180	Pass	
LN7JZE33	16.0020	Pass	96.90	.39	3.3	3.2055	29.7180	Pass	
LN7JZE34	16.0020	Pass	95.10	.40	3.2	3.1826	29.7180	Pass	
LN7JZE35	16.0020	Pass	96.80	.41	3.2	3.2182	29.7180	Pass	

Ing.

LN7JZE36	16.0020	Pass	96.00	.40	3.2	3.1547	29.7434	Pass	
LN7JZE37	16.0020	Pass	96.60	.40	3.3	3.2436	29.7434	Pass	
LN7JZE38	16.0020	Pass	95.60	.40	3.2	3.2004	29.7180	Pass	
LN7JZE39	16.0020	Pass	95.00	.42	3.3	3.1725	29.7180	Pass	
LN7JZE40	16.0020	Pass	93.30	.41	3.3	3.1699	29.7180	Pass	
LN7JZE41	16.0274	Pass	94.50	.39	3.3	3.1471	29.6672	Pass	
LN7JZE42	16.0020	Pass	91.90	.41	3.2	3.1953	29.6926	Pass	
LN7JZE43	16.0020	Pass	95.60	.38	3.2	3.2156	29.5910	Pass	
LN7JZE44	16.0020	Pass	95.80	.42	3.2	3.2233	29.6164	Pass	
LN7JZE45	16.0020	Pass	97.10	.41	3.3	3.1496	29.6418	Pass	
LN7JZE46	16.0020	Pass	94.90	.41	3.2	3.2106	29.6926	Pass	
LN7JZE47	16.0020	Pass	97.50	.40	3.2	3.2029	29.6164	Pass	
LN7JZE48	16.0020	Pass	97.50	.37	3.3	3.1801	29.7180	Pass	
LN7JZE49	16.0020	Pass	95.50	.38	3.3	3.1852	29.7180	Pass	
LN7JZE50	16.0020	Pass	96.60	.40	3.3	3.2156	29.7434	Pass	
LN7JZE51	16.0020	Pass	96.60	.37	3.3	3.2131	29.7434	Pass	
LN7JZE52	16.0020	Pass	94.90	.41	3.3	3.1928	29.7434	Pass	
LN7JZE53	16.0020	Pass	94.70	.40	3.3	3.1877	29.7180	Pass	
LN7JZE54	16.0020	Pass	96.00	.41	3.3	3.2436	29.7180	Pass	
LN7JZE55	16.0020	Pass	95.80	.39	3.3	3.2004	29.7180	Pass	
LN7JZE56	16.0020	Pass	97.30	.40	3.3	3.2055	29.7434	Pass	
LN7JZE57	16.0020	Pass	95.50	.42	3.3	3.2080	29.7180	Pass	
LN7JZE58	16.0020	Pass	96.60	.40	3.3	3.1902	29.7434	Pass	
LN7JZE59	16.1036	Pass	95.80	.38	3.2	3.2385	29.7434	Pass	
LN7JZE60	16.1036	Pass	96.10	.40	3.3	3.1979	29.7180	Pass	
LN7JZE61	16.1036	Pass	94.70	.39	3.3	3.3172	29.7180	Pass	
LN7JZE62	16.1036	Pass	93.80	.38	3.3	3.2309	29.7942	Pass	
LN7JZE63	16.1036	Pass	96.70	.39	3.3	3.2156	29.7942	Pass	
LN7JZE64	16.1036	Pass	94.40	.41	3.3	3.2258	29.7942	Pass	
LN7JZE65	16.1036	Pass	97.00	.40	3.3	3.1674	29.7942	Pass	
LN7JZE66	16.1036	Pass	95.50	.43	3.3	3.2436	29.6164	Pass	
LN7JZE67	16.1036	Pass	95.80	.42	3.3	3.2080	29.7942	Pass	
LN7JZE68	16.1036	Pass	98.50	.42	3.3	3.2182	29.7180	Pass	
LN7JZE69	16.1036	Pass	98.70	.39	3.3	3.2588	29.6672	Pass	

Inventory Report			
Reel #	Total Meters	Top	Drum
LN7JZE01	1478	10016859	10015381
LN7JZE02	1478	10018338	10016860

Ing. SEBASTIÁN CARELLO
Responsable Técnico

LN7JZE03	1478	10019817	10018339
LN7JZE04	1478	10021296	10019818
LN7JZE05	1478	10022775	10021297
LN7JZE06	1414	10024190	10022776
LN7JZE07	1478	10025723	10024245
LN7JZE08	1478	10027202	10025724
LN7JZE09	1478	10028681	10027203
LN7JZE10	1478	10030160	10028682
LN7JZE11	1478	10031639	10030161
LN7JZE12	1478	10033118	10031640
LN7JZE13	1478	10034605	10033127
LN7JZE14	1478	10036084	10034606
LN7JZE15	1478	10037563	10036085
LN7JZE16	1478	10039042	10037564
LN7JZE17	1478	10040521	10039043
LN7JZE18	1478	10042000	10040522
LN7JZE19	1478	10043486	10042008
LN7JZE20	1478	10044965	10043487
LN7JZE21	1478	10046444	10044966
LN7JZE22	1478	10047923	10046445
LN7JZE23	1478	10049402	10047924
LN7JZE24	1478	10050881	10049403
LN7JZE25	1478	10052370	10050892
LN7JZE26	1478	10053849	10052371
LN7JZE27	1478	10055328	10053850
LN7JZE28	1478	10056807	10055329
LN7JZE29	1478	10058286	10056808
LN7JZE30	1478	10059765	10058287
LN7JZE31	1478	10061253	10059775
LN7JZE32	1478	10062732	10061254
LN7JZE33	1478	10064211	10062733
LN7JZE34	1478	10065690	10064212
LN7JZE35	1478	10067169	10065691
LN7JZE36	1478	10068648	10067170
LN7JZE37	1478	10070143	10068665
LN7JZE38	1478	10071622	10070144
LN7JZE39	1478	10073101	10071623
LN7JZE40	1478	10074580	10073102
LN7JZE41	1478	10076059	10074581
LN7JZE42	1478	10077538	10076060

LN7JZE43	1478	10079022	10077544
LN7JZE44	1478	10080501	10079023
LN7JZE45	1478	10081980	10080502
LN7JZE46	1478	10083459	10081981
LN7JZE47	1478	10084938	10083460
LN7JZE48	1478	10086417	10084939
LN7JZE49	1478	10087901	10086423
LN7JZE50	1478	10087906	10089384
LN7JZE51	1478	10090863	10089385
LN7JZE52	1478	10092342	10090864
LN7JZE53	1478	10093821	10092343
LN7JZE54	1478	10095300	10093822
LN7JZE55	1478	10096809	10095331
LN7JZE56	1478	10098288	10096810
LN7JZE57	1478	10099767	10098289
LN7JZE58	1478	10101246	10099768
LN7JZE59	1478	10102725	10101247
LN7JZE60	1478	10104214	10102736
LN7JZE61	1478	10105705	10104227
LN7JZE62	1478	10107184	10105706
LN7JZE63	1478	10108663	10107185
LN7JZE64	1478	10110154	10108676
LN7JZE65	1478	10114443	10112965
LN7JZE66	1478	10115922	10114444
LN7JZE67	1478	10117401	10115923
LN7JZE68	1478	10118881	10117403
LN7JZE69	1478	10120361	10118883

Ing. SEBASTIÁN CARELLO

Marmon Utility LLC MARMON Hendrix

53 Old Wilton Road, Milford, NH 03055

CERTIFIED TEST REPORT NUMBER 36750
INSULATED POWER CABLE RATED 5 TO 35 KV

PURCHASER	Limburg Equities S.A.
PURCHASER'S ORDER #	038-2016 /LPI ANDE No 1205/16
PURCHASER'S PART #	Limberg Equities S.A.
CABLE DESCRIPTION	ANDE 03.24.25 REV. 2 Al 185mm2 19X PACT 25kV 75 3LYR
CABLE QUANTITY	102,968 Meters
NUMBER OF REELS	70
DOCUMENT ID	125682000779a01
MARMON ORDER NUMBER	069088
REPORT DATE	December 22nd, 2016

CERTIFICATION OF TESTS

J. Douglas Batty Mgr. QA & Prod. Eng.
Typewritten Name and Title

SLD 12/22/16

Ing. SEBASTIÁN CABELLO
Representante Legal

Aerial Cable Metric									
Reel #	Cond OD mm	Bonding layers	Concentricity (%)	SS Wall Avg mm	Ins Wall Avg mm	Jacket Wall Avg mm	Jacket OD mm	Spark (KV)	DC Resistance 20 (O1K)
Specs	Min=15.95		Min=85 Max=100	Min=.254	Min=2.38	Min=2.38	Min=29.31		Max=.0483
LN7KBB01	16.1036	Pass	97.10	.47	3.4	3.0150	29.5656	Pass	
LN7KBB02	16.1036	Pass	96.30	.48	3.3	3.0353	29.6418	Pass	
LN7KBB03	16.1036	Pass	97.10	.45	3.2	3.1140	29.5402	Pass	
LN7KBB04	16.1036	Pass	96.10	.49	3.2	3.0734	29.4894	Pass	
LN7KBB05	16.1036	Pass	97.40	.46	3.2	3.0556	29.5148	Pass	.0470
LN7KBB06	16.0020	Pass	95.90	.51	3.2	3.0607	29.5910	Pass	
LN7KBB07	16.0020	Pass	95.80	.46	3.3	3.0632	29.5656	Pass	
LN7KBB08	16.0528	Pass	96.50	.50	3.3	2.9997	29.6672	Pass	
LN7KBB09	16.0020	Pass	95.10	.48	3.2	3.1953	29.6164	Pass	
LN7KBB10	16.0274	Pass	94.70	.50	3.2	3.1572	29.7180	Pass	
LN7KBB11	16.0528	Pass	96.70	.49	3.2	3.1471	29.6164	Pass	
LN7KBB12	16.0274	Pass	95.50	.48	3.2	3.2131	29.6164	Pass	
LN7KBB13	16.0274	Pass	95.10	.46	3.2	3.1750	29.6672	Pass	
LN7KBB14	16.0528	Pass	94.60	.49	3.1	3.1979	29.5910	Pass	
LN7KBB15	16.0020	Pass	92.00	.50	3.3	3.0429	29.6418	Pass	
LN7KBB16	16.0274	Pass	94.70	.51	3.3	3.0785	29.6672	Pass	
LN7KBB17	16.0020	Pass	95.00	.49	3.2	3.0531	29.6672	Pass	
LN7KBB18	16.0274	Pass	93.30	.48	3.3	3.1242	29.6672	Pass	
LN7KBB19	16.0274	Pass	98.30	.50	3.2	3.1064	29.6926	Pass	
LN7KBB20	16.0274	Pass	95.60	.48	3.3	3.0785	29.6672	Pass	
LN7KBB21	16.0274	Pass	96.10	.50	3.3	3.1064	29.6418	Pass	
LN7KBB22	16.0274	Pass	97.30	.50	3.2	3.0988	29.6672	Pass	
LN7KBB23	16.0274	Pass	91.00	.51	3.3	3.0607	29.6418	Pass	
LN7KBB24	16.0020	Pass	97.70	.50	3.3	3.0048	29.5910	Pass	
LN7KBB25	16.0020	Pass	96.90	.50	3.3	3.0861	29.5910	Pass	
LN7KBB26	16.0528	Pass	98.20	.50	3.2	3.0429	29.5656	Pass	
LN7KBB27	16.0274	Pass	97.50	.47	3.2	3.1039	29.6672	Pass	
LN7KBB28	16.0274	Pass	95.10	.46	3.2	3.1750	29.5656	Pass	
LN7KBB29	16.0274	Pass	94.90	.49	3.2	3.1293	29.6672	Pass	
LN7KBB30	16.0020	Pass	94.60	.49	3.1	3.1826	29.6926	Pass	
LN7KBB31	16.0020	Pass	96.90	.48	3.3	3.0937	29.6164	Pass	
LN7KBB32	16.0020	Pass	95.30	.46	3.2	3.1191	29.6418	Pass	
LN7KBB33	16.0274	Pass	97.20	.50	3.2	3.0759	29.5910	Pass	

Ing. [illegible]

LN7KBB34	16.0020	Pass	93.20	.52	3.2	3.1623	29.6926	Pass	
LN7KBB35	16.0020	Pass	96.10	.52	3.2	3.1064	29.6672	Pass	
LN7KBB36	16.0020	Pass	95.90	.51	3.3	3.1344	29.6926	Pass	
LN7KBB37	16.0020	Pass	93.20	.52	3.3	3.1166	29.6672	Pass	
LN7KBB38	16.0020	Pass	96.80	.51	3.2	3.1725	29.6926	Pass	
LN7KBB39	16.0020	Pass	97.70	.49	3.3	3.1293	29.6672	Pass	
LN7KBB40	16.0020	Pass	93.30	.47	3.2	3.1445	29.6926	Pass	
LN7KBB41	16.0020	Pass	97.50	.50	3.2	3.0988	29.6926	Pass	
LN7KBB42	16.0020	Pass	96.60	.48	3.3	3.1115	29.7180	Pass	
LN7KBB43	16.0274	Pass	97.20	.49	3.2	3.0836	29.6672	Pass	
LN7KBB44	16.0020	Pass	95.70	.49	3.2	3.1115	29.5910	Pass	
LN7KBB45	16.0020	Pass	94.90	.48	3.2	3.0810	29.6672	Pass	
LN7KBB46	16.0528	Pass	94.40	.47	3.2	3.0785	29.6672	Pass	
LN7KBB47	16.0020	Pass	94.10	.48	3.2	3.0759	29.6672	Pass	
LN7KBB48	16.0020	Pass	95.70	.49	3.2	3.0937	29.6926	Pass	
LN7KBB49	16.0274	Pass	97.10	.48	3.2	3.1293	29.5910	Pass	
LN7KBB50	16.0274	Pass	97.30	.47	3.2	3.0429	29.5656	Pass	
LN7KBB51	16.0020	Pass	94.10	.50	3.2	3.0963	29.5910	Pass	
LN7KBB52	16.0020	Pass	94.50	.50	3.2	3.1115	29.6926	Pass	
LN7KBB53	16.0020	Pass	97.10	.49	3.2	3.0836	29.6926	Pass	
LN7KBB54	16.0020	Pass	97.80	.53	3.3	3.1140	29.7180	Pass	
LN7KBB55	16.0782	Pass	96.10	.51	3.3	3.0378	29.7180	Pass	
LN7KBB56	16.1036	Pass	95.60	.49	3.3	3.0759	29.6164	Pass	
LN7KBB57	16.1036	Pass	93.40	.52	3.3	3.0429	29.6418	Pass	
LN7KBB58	16.1036	Pass	97.00	.49	3.3	3.0505	29.6672	Pass	
LN7KBB59	16.1036	Pass	96.30	.47	3.3	3.0505	29.6164	Pass	
LN7KBB60	16.1036	Pass	98.20	.50	3.2	3.0734	29.6418	Pass	
LN7KBB61	16.1036	Pass	97.90	.51	3.3	3.0201	29.6418	Pass	
LN7KBB62	16.1036	Pass	97.40	.52	3.3	3.0099	29.6164	Pass	
LN7KBB63	16.1036	Pass	96.10	.47	3.3	3.0709	29.6164	Pass	
LN7KBB64	16.1036	Pass	97.40	.47	3.3	3.0480	29.6418	Pass	
LN7KBB65	16.0020	Pass	95.60	.53	3.2	3.1191	29.6164	Pass	
LN7KBB66	16.0020	Pass	97.90	.52	3.3	3.0480	29.6164	Pass	
LN7KBB67	16.0020	Pass	98.90	.52	3.3	3.0658	29.6418	Pass	
LN7KBB68	16.0020	Pass	97.60	.55	3.3	3.0404	29.6164	Pass	
LN7KBB69	16.0020	Pass	98.60	.55	3.3	3.0582	29.6164	Pass	
LN7KBB70	16.0020	Pass	98.00	.55	3.3	3.0937	29.6164	Pass	

Ing. SEBASTIÁN PUELLO

Inventory Report			
Reel #	Total Meters	Top	Drum
LN7KBB01	1478	10977306	10975828
LN7KBB02	1470	10978777	10977307
LN7KBB03	1470	10980248	10978778
LN7KBB04	1470	10981719	10980249
LN7KBB05	1478	10983198	10981720
LN7KBB06	1460	10984660	10983200
LN7KBB07	1478	10986141	10984663
LN7KBB08	1478	10987620	10986142
LN7KBB09	1478	10989099	10987621
LN7KBB10	1478	10990578	10989100
LN7KBB11	1478	10992057	10990579
LN7KBB12	1478	10993543	10992065
LN7KBB13	1478	10995022	10993544
LN7KBB14	1478	10996501	10995023
LN7KBB15	1478	10037563	10036085
LN7KBB16	1478	10999459	10997981
LN7KBB17	1478	11000938	10999460
LN7KBB18	1478	11002430	11000952
LN7KBB19	1478	11003909	11002431
LN7KBB20	1478	11005388	11003910
LN7KBB21	1478	11006867	11005389
LN7KBB22	1478	11008346	11006868
LN7KBB23	1478	11009825	11008347
LN7KBB24	1478	11011319	11009841
LN7KBB25	1478	11012798	11011320
LN7KBB26	1478	11014277	11012799
LN7KBB27	1478	11015756	11014278
LN7KBB28	1478	11017235	11015757
LN7KBB29	1478	11018714	11017236
LN7KBB30	1478	11020201	11018723
LN7KBB31	1478	11021680	11020202
LN7KBB32	1478	11023159	11021681
LN7KBB33	1478	11024638	11023160
LN7KBB34	1478	11026117	11024639
LN7KBB35	1478	11027596	11026118
LN7KBB36	1478	11029090	11027612
LN7KBB37	1478	11030569	11029091

Ing. SERGIO A. CIRELLO

LN7KBB38	1478	11032048	11030570
LN7KBB39	1478	11033527	11032049
LN7KBB40	1255	11034783	11033528
LN7KBB41	1255	11035260	11036515
LN7KBB42	1478	11037997	11036519
LN7KBB43	1478	11039476	11037998
LN7KBB44	1478	11040955	11039477
LN7KBB45	1478	11042434	11040956
LN7KBB46	1478	11043913	11042435
LN7KBB47	1478	11045392	11043914
LN7KBB48	1478	11046881	11045403
LN7KBB49	1478	11048360	11046882
LN7KBB50	1478	11049839	11048361
LN7KBB51	1478	11051318	11049840
LN7KBB52	1478	11052804	11051326
LN7KBB53	1478	11054297	11052819
LN7KBB54	1478	11196378	11194900
LN7KBB55	1478	11197866	11196388
LN7KBB56	1478	11199345	11197867
LN7KBB57	1478	11200824	11199346
LN7KBB58	1478	11202303	11200825
LN7KBB59	1472	11203776	11202304
LN7KBB60	1478	11205257	11203779
LN7KBB61	1478	11206736	11205258
LN7KBB62	1478	11208215	11206737
LN7KBB63	1478	11209694	11208216
LN7KBB64	1478	11211173	11209695
LN7KBB65	1478	11212659	11211181
LN7KBB66	1478	11214138	11212660
LN7KBB67	1478	11215617	11214139
LN7KBB68	1478	11217117	11215639
LN7KBB69	1478	11218596	11217118
LN7KBB70	1478	11220075	11218597

Ing. SEBASTIÁN CASTILLO
Representante Legal

Marmon Utility LLC MARMON Hendrix

53 Old Wilton Road, Milford, NH 03055

CERTIFIED TEST REPORT NUMBER 36749
INSULATED POWER CABLE RATED 5 TO 35 KV

PURCHASER	Limburg Equities S.A.
PURCHASER'S ORDER #	038-2016 /LPI ANDE No 1205/16
PURCHASER'S PART #	Limberg Equities S.A.
CABLE DESCRIPTION	ANDE 03.24.25 REV. 2 Al 185mm2 19X PACT 25kV 75 3LYR
CABLE QUANTITY	100,565 Meters
NUMBER OF REELS	68
DOCUMENT ID	125683000779a01
MARMON ORDER NUMBER	069088
REPORT DATE	December 22nd, 2016

CERTIFICATION OF TESTS

J, Douglas Batty Mgr. QA & Prod. Eng.
Typewritten Name and Title

SLD 12/22/16

Aerial Cable Metric									
Reel #	Cond OD mm	Bonding layers	Concentricity (%)	SS Wall Avg mm	Ins Wall Avg mm	Jacket Wall Avg mm	Jacket OD mm	Spark (KV)	DC Resistance 20 (O1K)
Specs	Min=15.95		Min=85 Max=100	Min=.254	Min=2.38	Min=2.38	Min=29.31		Max=.0483
LN7KDA01	16.1036	Pass	94.40	.52	3.3	3.0632	29.6672	Pass	
LN7KDA02	16.1036	Pass	93.70	.50	3.5	2.9743	29.6418	Pass	.0473
LN7KDA03	16.0782	Pass	94.70	.50	3.4	2.9896	29.7434	Pass	
LN7KDA04	16.0528	Pass	95.30	.49	3.3	3.0277	29.6926	Pass	
LN7KDA05	16.1036	Pass	96.60	.49	3.3	3.0251	29.6672	Pass	
LN7KDA06	16.1036	Pass	95.10	.49	3.3	3.0277	29.7180	Pass	
LN7KDA07	16.1036	Pass	93.70	.47	3.2	3.1648	29.6672	Pass	
LN7KDA08	16.1036	Pass	94.70	.49	3.2	3.2004	29.7434	Pass	
LN7KDA09	16.1036	Pass	94.50	.46	3.1	3.2410	29.6926	Pass	
LN7KDA10	15.9766	Pass	96.50	.48	3.2	3.2080	29.7180	Pass	
LN7KDA11	16.1036	Pass	96.70	.45	3.2	3.1902	29.7180	Pass	
LN7KDA12	15.9766	Pass	93.90	.50	3.2	3.2385	29.7434	Pass	
LN7KDA13	16.1036	Pass	93.30	.47	3.2	3.1902	29.7180	Pass	
LN7KDA14	15.9766	Pass	95.20	.49	3.2	3.2182	29.7434	Pass	
LN7KDA15	16.1036	Pass	97.10	.50	3.1	3.1344	29.7688	Pass	
LN7KDA16	16.1036	Pass	96.60	.51	3.2	3.1140	29.7180	Pass	
LN7KDA17	16.1036	Pass	99.10	.50	3.1	3.1598	29.7434	Pass	
LN7KDA18	16.1036	Pass	99.50	.49	3.1	3.1242	29.7180	Pass	
LN7KDA19	16.0782	Pass	95.80	.50	3.1	3.1547	29.7180	Pass	
LN7KDA20	16.0782	Pass	97.10	.48	3.2	3.1166	29.7434	Pass	
LN7KDA21	16.1036	Pass	98.70	.48	3.2	3.1191	29.7434	Pass	
LN7KDA22	16.1036	Pass	97.30	.49	3.2	3.0988	29.7688	Pass	
LN7KDA23	16.1036	Pass	97.20	.49	3.2	3.1039	29.7434	Pass	
LN7KDA24	16.1036	Pass	98.70	.50	3.1	3.1090	29.7688	Pass	
LN7KDA25	16.0020	Pass	95.10	.51	3.1	3.0988	29.5656	Pass	
LN7KDA26	16.0020	Pass	97.00	.50	3.2	3.1039	29.6418	Pass	
LN7KDA27	16.0020	Pass	96.80	.50	3.2	3.1115	29.6672	Pass	
LN7KDA28	16.0020	Pass	97.70	.44	3.2	3.2207	29.7180	Pass	
LN7KDA29	16.0020	Pass	95.70	.49	3.1	3.2106	29.7434	Pass	
LN7KDA30	16.0020	Pass	93.10	.50	3.1	3.1750	29.7180	Pass	
LN7KDA31	16.0020	Pass	94.60	.49	3.2	3.1699	29.7180	Pass	
LN7KDA32	16.0020	Pass	97.20	.50	3.2	3.1394	29.6672	Pass	
LN7KDA33	16.0020	Pass	96.50	.49	3.2	3.1775	29.6672	Pass	
LN7KDA34	16.0020	Pass	96.10	.50	3.2	3.1547	29.6418	Pass	
LN7KDA35	16.0020	Pass	97.70	.48	3.2	3.1394	29.6926	Pass	

LN7KDA36	16.0020	Pass	96.90	.46	3.2	3.1648	29.7180	Pass	
LN7KDA37	16.0528	Pass	97.60	.48	3.2	3.1699	29.7434	Pass	
LN7KDA38	16.0274	Pass	96.50	.49	3.2	3.1572	29.7688	Pass	
LN7KDA39	16.0528	Pass	96.50	.50	3.2	3.1394	29.7688	Pass	
LN7KDA40	16.0528	Pass	97.30	.49	3.2	3.1394	29.7688	Pass	
LN7KDA41	16.0528	Pass	95.40	.48	3.2	3.1369	29.7434	Pass	
LN7KDA42	16.0528	Pass	95.40	.48	3.2	3.0658	29.7434	Pass	
LN7KDA43	16.0274	Pass	97.20	.50	3.2	3.1242	29.7180	Pass	
LN7KDA44	16.0274	Pass	96.50	.49	3.2	3.1445	29.7688	Pass	
LN7KDA45	16.0274	Pass	98.00	.48	3.2	3.1471	29.7688	Pass	
LN7KDA46	16.0274	Pass	97.80	.46	3.2	3.1242	29.7688	Pass	
LN7KDA47	16.1036	Pass	96.00	.46	3.2	3.1293	29.6164	Pass	
LN7KDA48	16.1036	Pass	97.20	.49	3.2	3.0937	29.6164	Pass	
LN7KDA49	16.1290	Pass	96.80	.50	3.2	3.1064	29.6164	Pass	
LN7KDA50	16.1290	Pass	97.30	.46	3.2	3.1699	29.5910	Pass	
LN7KDA51	16.1036	Pass	96.50	.52	3.2	3.1267	29.6418	Pass	
LN7KDA52	16.1036	Pass	97.10	.45	3.2	3.1064	29.6164	Pass	
LN7KDA53	16.1036	Pass	95.20	.53	3.1	3.1547	29.6164	Pass	
LN7KDA54	16.1036	Pass	97.30	.51	3.2	3.0886	29.5910	Pass	
LN7KDA55	16.1036	Pass	99.00	.53	3.1	3.2106	29.5656	Pass	
LN7KDA56	16.1036	Pass	97.90	.52	3.1	3.0328	29.5910	Pass	
LN7KDA57	16.1036	Pass	97.00	.51	3.2	3.1191	29.6164	Pass	
LN7KDA58	16.1036	Pass	96.80	.54	3.2	3.1344	29.5910	Pass	
LN7KDA59	16.1036	Pass	97.00	.54	3.2	3.1013	29.5656	Pass	
LN7KDA60	16.1036	Pass	96.10	.53	3.1	3.1775	29.5656	Pass	
LN7KDA61	16.1036	Pass	95.50	.54	3.2	3.1369	29.5656	Pass	
LN7KDA62	16.1036	Pass	95.10	.52	3.2	3.1191	29.5656	Pass	
LN7KDA63	16.1036	Pass	94.80	.57	3.1	3.1496	29.5656	Pass	
LN7KDA64	16.1036	Pass	96.40	.56	3.2	3.1293	29.5148	Pass	
LN7KDA65	16.0528	Pass	95.60	.55	3.1	3.1877	29.4640	Pass	
LN7KDA66	16.0020	Pass	95.90	.54	3.1	3.1267	29.5148	Pass	
LN7KDA67	16.0274	Pass	94.60	.57	3.1	3.0988	29.5148	Pass	
LN7KDA68	16.1036	Pass	96.70	.52	3.2	3.0632	29.5910	Pass	

Inventory Report			
Reel #	Total Meters	Top	Drum
LN7KDA01	1479	12390536	12389057
LN7KDA02	1479	12392036	12390557
LN7KDA03	1479	12393516	12392037

LN7KDA04	1479	12395007	12393528
LN7KDA05	1479	12396487	12395008
LN7KDA06	1479	12397967	12396488
LN7KDA07	1479	12399447	12397968
LN7KDA08	1479	12400927	12399448
LN7KDA09	1479	12402415	12400936
LN7KDA10	1479	12403895	12402416
LN7KDA11	1479	12405375	12403896
LN7KDA12	1479	12406855	12405376
LN7KDA13	1479	12408335	12406856
LN7KDA14	1479	12409822	12408343
LN7KDA15	1478	12411302	12409824
LN7KDA16	1479	12412782	12411303
LN7KDA17	1479	12414262	12412783
LN7KDA18	1479	12415742	12414263
LN7KDA19	1479	12417222	12415743
LN7KDA20	1479	12418719	12417240
LN7KDA21	1479	12420199	12418720
LN7KDA22	1479	12421679	12420200
LN7KDA23	1479	12423159	12421680
LN7KDA24	1479	12424639	12423160
LN7KDA25	1479	12426119	12424640
LN7KDA26	1479	12424888	12426130
LN7KDA27	1479	12429089	12427610
LN7KDA28	1479	12430569	12429090
LN7KDA29	1479	12432049	12430570
LN7KDA30	1479	12433529	12432050
LN7KDA31	1479	12435009	12433530
LN7KDA32	1479	12436497	12435018
LN7KDA33	1479	12437977	12436498
LN7KDA34	1479	12439457	12437978
LN7KDA35	1479	12440937	12439458
LN7KDA36	1479	12442417	12440938
LN7KDA37	1475	12443900	12442425
LN7KDA38	1475	12445376	12443901
LN7KDA39	1475	12446853	12445378
LN7KDA40	1475	12448329	12446854
LN7KDA41	1475	12449805	12448330
LN7KDA42	1475	12451281	12449806
LN7KDA43	1479	12452775	12451296

Ing. SEBASTIÁN CARELLO

LN7KDA44	1479	12454255	12452776
LN7KDA45	1479	12455735	12454256
LN7KDA46	1479	12457215	12455736
LN7KDA47	1479	12458695	12457216
LN7KDA48	1479	12460185	12458706
LN7KDA49	1479	12461676	12460197
LN7KDA50	1479	12463156	12461677
LN7KDA51	1479	12464636	12463157
LN7KDA52	1479	12466116	12464637
LN7KDA53	1479	12467596	12466117
LN7KDA54	1479	12469104	12467625
LN7KDA55	1479	12470584	12469105
LN7KDA56	1479	12472064	12470585
LN7KDA57	1479	12473544	12472065
LN7KDA58	1479	12475024	12473545
LN7KDA59	1479	12476537	12475058
LN7KDA60	1479	12478018	12476539
LN7KDA61	1479	12479498	12478019
LN7KDA62	1479	12480978	12479499
LN7KDA63	1479	12482458	12480979
LN7KDA64	1479	12483946	12482467
LN7KDA65	1479	12485427	12483948
LN7KDA66	1479	12486907	12485428
LN7KDA67	1479	12488388	12486909
LN7KDA68	1479	12489868	12488389

Ing. SEBASTIAN CAMELLO

Marmon Utility LLC MARMON Hendrix

53 Old Wilton Road, Milford, NH 03055

CERTIFIED TEST REPORT NUMBER 36751
INSULATED POWER CABLE RATED 5 TO 35 KV

PURCHASER	Limburg Equities S.A.
PURCHASER'S ORDER #	038-2016 /LPI ANDE No 1205/16
PURCHASER'S PART #	Limberg Equities S.A.
CABLE DESCRIPTION	ANDE 03.24.25 REV. 2 Al 35 mm2 7X PACT 25kV 75 3LYR 0.38
CABLE QUANTITY	27,861 Meters
NUMBER OF REELS	11
DOCUMENT ID	138881000779a01
MARMON ORDER NUMBER	069088
REPORT DATE	December 22nd, 2016

CERTIFICATION OF TESTS

J. Douglas Batty Mgr. QA & Prod. Eng.
Typewritten Name and Title

SLD 12/22/16

Aerial Cable Metric									
Reel #	Cond OD mm	Bonding layers	Concentricity (%)	SS Wall Avg mm	Ins Wall Avg mm	Jacket Wall Avg mm	Jacket OD mm	Spark (KV)	DC Resistance 20 (O1K)
Specs	Min=6.73		Min=85 Max=100	Min=.254	Min=2.38	Min=2.38	Min=20.01		Max=.261
LN7KAD01	6.8072	Pass	92.20	.41	3.7	2.8397	20.6756	Pass	
LN7KAD02	6.8072	Pass	91.70	.39	3.5	3.0378	20.6756	Pass	.2540
LN7KAD03	6.8072	Pass	95.40	.40	3.3	3.0937	20.6502	Pass	
LN7KAD04	6.7818	Pass	93.40	.41	3.4	3.1521	20.6502	Pass	
LN7KAD05	6.7818	Pass	94.90	.37	3.3	3.2156	20.6502	Pass	
LN7KAD06	6.7818	Pass	95.30	.40	3.4	3.1140	20.6502	Pass	
LN7KAD07	6.8072	Pass	94.90	.40	3.4	3.1013	20.5740	Pass	
LN7KAD08	6.8072	Pass	94.10	.38	3.3	3.1496	20.6248	Pass	
LN7KAD09	6.8072	Pass	96.40	.39	3.3	3.1064	20.4216	Pass	
LN7KAD10	6.8072	Pass	95.30	.43	3.3	3.1547	20.6756	Pass	
LN7KAD11	6.8072	Pass	94.50	.38	3.3	3.1826	20.7010	Pass	

Inventory Report			
Reel #	Total Meters	Top	Drum
LN7KAD01	2757	10540588	10537831
LN7KAD02	2753	10514918	10512165
LN7KAD03	1555	10516539	10514984
LN7KAD04	2757	10519604	10516847
LN7KAD05	2757	10522362	10519605
LN7KAD06	2757	10525120	10522363
LN7KAD07	2757	10527878	10525121
LN7KAD08	2757	10530636	10527879
LN7KAD09	2743	10533411	10530668
LN7KAD10	2744	10536156	10533412
LN7KAD11	1524	10537767	10536243

Ing. SEBASTIÁN CIVELLO

Testing	: A-C Loss Characteristics and Permittivity (Dielectric Constant)
Test Method	: ASTM D150-95
Project #	: 00-634 Purchase Order # : 92303
Customer	: Hendrix
Attention	: Gary Granier
Analyst	: P. Swint
Date	: April 27, 2000

Material	: **High Density Polyethylene Plaques**
Sample Dimensions	: 3.5" x 8" Plaques
Electrode Type	: Guarded Parallel Plate
Electrode Dimensions	: 2.125" Diameter, Sensing Area 1.75" Diameter
Measurement Method	: Three Terminal
Measurement Circuit	: Parallel
Applied Voltage	: 5.00 Volts
Sample Conditioning	: 40+ Hours at 23°C/50% RH
Test Conditions	: 23°C/50% RH
Frequency	: 1 KHZ

Frequency	Thickness (in)	Sample Dissipation Factor	Air Dissipation Factor At Sample Capacitance	Corrected Dissipation Factor, D	Sample Capacitance (pF)	Air Capacitance (pF)	Dielectric Constant, k'
0.125" Black	0.1180	-0.00029	-0.00046	0.00017	10.1234	4.6861	2.1603
	0.1114	-0.00029	-0.00049	0.00020	11.0182	4.8782	2.2587
	0.1180	-0.00015	-0.00046	0.00031	10.4456	4.6057	2.2680
Average				0.00023			2.2290
0.125" Gray	0.1143	-0.00017	-0.00046	0.00029	10.4173	4.7580	2.1894
	0.1111	-0.00020	-0.00049	0.00029	10.8447	4.8900	2.2177
	0.1151	-0.00018	-0.00047	0.00029	10.5485	4.7277	2.2308
Average				0.00029			2.2126

Plastics Technology Laboratories, Inc. reports are issued for the exclusive use of the clients to whom they are addressed. No quotations from reports or use of the Plastics Technology Laboratories, Inc. name is permitted except as expressly authorized in writing. Unless otherwise specifically stated, the specific materials, products or processes tested, examined or surveyed and are not necessarily indicative of the qualities of apparently identical or similar materials, products or processes. The liability of Plastics Technology Laboratories, Inc. with respect to services rendered shall be limited to the amount of consideration paid for such services and not include any consequential damages.

Ing. SEBASTIAN CAPELLO
Representante Legal

50 Pearl Street, Pittsfield, MA 01201
Phone (413) 499-0983, Fax 499-2339
http://www.ptl.com

CABLE TECHNOLOGY LABORATORIES, INC.

690 Jersey Avenue — P.O. Box 707 — Fax: (732) 846-553
New Brunswick, N.J. 08903 Tel: (732) 846-313
(732) 846-3220-

November 4, 2005

Mr. Gary Grenier
Aerial Process Engineer
Hendrix
53 Old Wilton Road
Milford, NH 03055-3119

Report No. 05-113-5

RE: TENSILE STRENGTH AND ULTIMATE ELONGATION

Cable Technology Laboratories has measured tensile strength and ultimate elongation of the compound identified by Hendrix as: Gray High Density Polyethylene.

The measurements were performed in accordance with ICEA S 61 402 Specification and ASTM D 412 Standard using an Electronic Tensile Tester, Model 65TM, manufactured by Thwing-Albert Instrument Company. The tensile tester was calibrated prior to measurements using weights calibrated on 5/16/05.

ASTM Die D was used to cut samples from the polyethylene plaques. Gauge marks were 1 inch apart and the jaw separation speed rate was 2 inch/min.

The results of test are given in the table below.

Specimen Number	Specimen Thickness (mil)	Tensile Strength (psi)		Ultimate Elongation (%)		Result
		Actual	Required	Actual	Required	
1	72	3230	--	525	--	Passed
2	71	2650	--	625	--	
3	70	3520	--	750	--	
Average Value	--	3140	min. 2800	630	min. 400	

Ing. SEBASTIÁN CAMELLO

Tests supervised and reported by

PLASTICS TECHNOLOGY LABORATORIES, INC.

Testing	:	Environmental Stress-Cracking of Ethylene Plastics
Test Method	:	ASTM D1693-01 per ASTM D1248-02, Section 11.1.8.3 - **Modified ****
Project Number	:	P20051652 Purchase Order # : 9258
Customer	:	Hendrix Wire & Cable, Inc.
Attention	:	Gary Grenier
Analyst	:	S. Polastri
Date	:	September 30, 2005

Material	:	**High Density Polyethylene**
Sample Preparation	:	Plaques tested as received from customer - conditioning time waived**
Specimen Preparation	:	ESCR specimens were die cut and nicked by PTLI
Reagent	:	Igepal CO-630
Reagent Strength	:	**10% by volume**
Test Condition	:	**B**
Notch Depth	:	0.012 - 0.015 in.
Bath Temperature	:	50°C
Test Duration	:	**48 Hours**

Sample ID	:	**Gray High Density Polyethylene**
% Sample Failure at Test Duration	:	0 48 Hours

Plastics Technology Laboratories, Inc. reports are issued for the exclusive use of the clients to whom they are addressed. No quotations from reports or use of the Plastics Technology Laboratories, Inc. name is permitted except as expressly authorized in writing. Letters and reports apply only to the specific materials, products or processes tested, examined or surveyed and are not necessarily indicative of the qualities of apparently identical or similar materials, products or processes. The liability of Plastics Technology Laboratories, Inc. with respect to services rendered shall be limited to the amount of consideration paid for such services and not include any consequential damages.

50 Pearl Street, Pittsfield, MA 01201
Phone (413) 499-0983, Fax 499-2339
http://www.ptli.com

Ing. SERGIO [illegible] CARELLO
Representante Legal

CABLE TECHNOLOGY LABORATORIES, INC.

690 Jersey Avenue — P.O. Box 707 — Fax: (732) 846-553
New Brunswick, N.J. 08903 Tel: (732) 846-313
(732) 846-3220-

December 1, 2005

Mr. Gary Grenier
Aerial Process Engineer
Hendrix
53 Old Wilton Road
Milford, NH 03055-3119

Report No. 05-113-12

RE: LIQUID-CONTAMINANT, INCLINED-PLANE TRACKING

Cable Technology Laboratories has performed Liquid-Contaminant, Inclined-Plane Tracking and Erosion test on the compound identified by Hendrix as: Gray Blend High Density Polyethylene.

The test was performed fully in accordance with ASTM D 2303 Standard Method. The contaminant solution had a resistivity of 400 Ωcm at 24 °C and its rate of application was 0.15 ml/min. A constant ac voltage of 2500 V was applied between electrodes. None of the samples failed during testing.

The test results are given in the following table.

Specimen Designation	Average Thickness (mils)	Time Under Test (hour)	Results	Observations
A	122	33	Pass	Minimal tracking
B	122	25	Pass	Minimal tracking
C	118	25	Pass	Minimal tracking
D	115	43	Pass	Minimal tracking
E	123	43	Pass	Minimal tracking

The minimum required number of hours to pass was 25 hours.

The column headed "Time Under Test (hour)" indicates the number of hours after which the test was terminated.

Tests supervised and reported by

THE INFORMATION CONTAINED IN THIS DRAWING IS THE SOLE PROPERTY OF HENDRIX WIRE AND CABLE ANY REPRODUCTION IN PART OR WHOLE WITHOUT THE WRITTEN PERMISSION OF HENDRIX WIRE AND CABLE IS PROHIBITED.

ITEM NO.	QTY.	PART NO.
1	1	BP-2 Z-bracket
2*	1	3/4"-10 2in. LONG FULL THREAD HEX HEAD GALVANIZED BOLT - A307
3*	1	3/4" GALVANIZED FLAT WASHER
4*	1	3/4" GALVANIZED LOCK WASHER
5*	1	3/4" - 10 GALVANIZED HEX NUT
*NOT SHOWN		

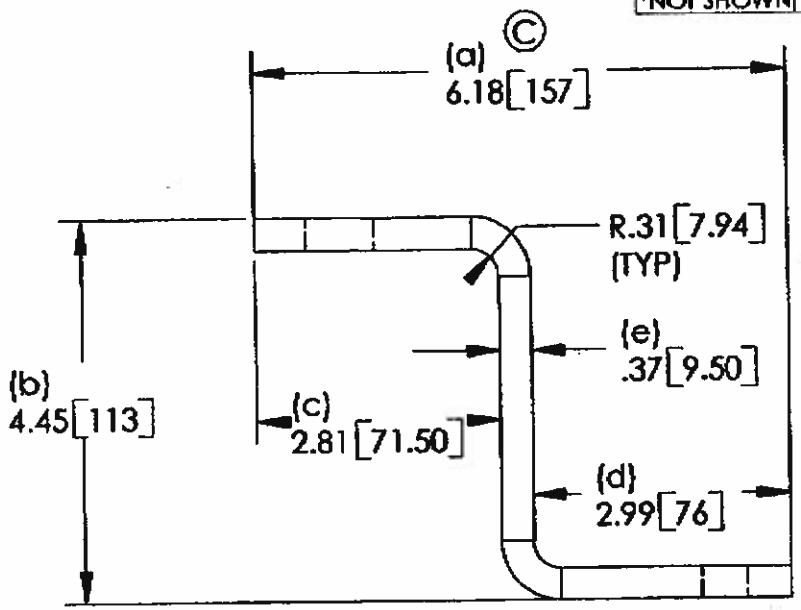

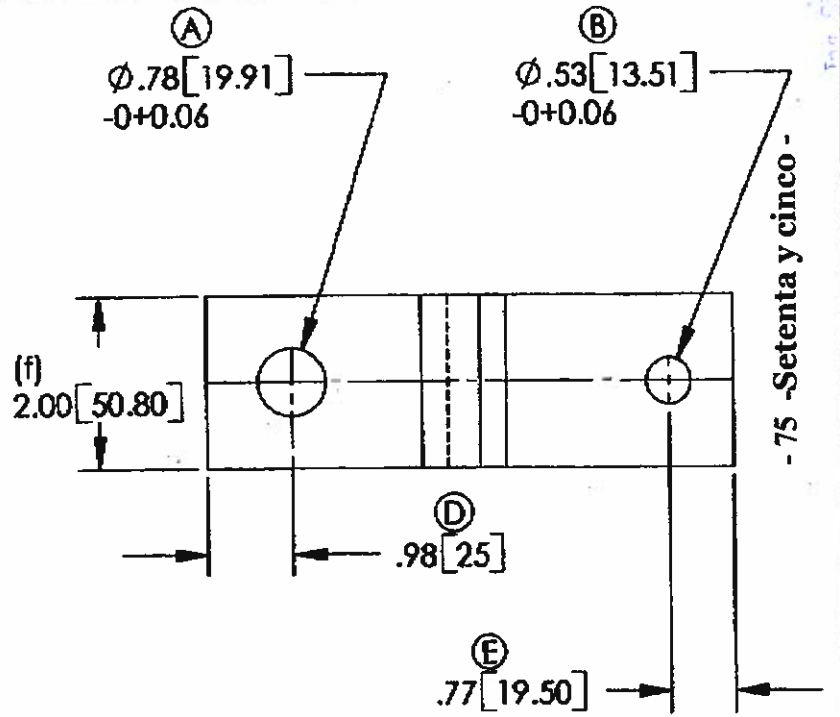

- 75 -Setenta y cinco -

NOTES:
1. MATERIAL IS TO BE ASTM A36 - 3/8" FLAT STOCK.
2. FINISH IS TO BE ASTM A153.
3. NO SHARP EDGES.
4. "[nnn]" DEFINE DIMENSIONS IN MILLIMETERS.
5. UNLESS OTHERWISE SPECIFIED - METRIC TOLERANCE +/- 3mm.
6. BOLT HOLES ARE FOR AMERICAN NATIONAL STANDARD HEX BOLTS (ANSI B18.2.1-1981).
7. "(a)" thru "(f)" REFERENCE INTERNATIONAL DRAWING.
8. "A" THRU "E" REFERENCE MPS REQUIREMENTS.

UNLESS OTHERWISE SPECIFIED DIMENSIONS ARE IN INCHES TOLERANCES ARE: FRACTIONS ±1/32" DECIMALS ±0.03 ANGLES ±1°	CAD GENERATED DRAWING. DO NOT MANUALLY UPDATE	HENDRIX 53 OLD WILTON RD., MILFORD, NH 03055-3119
MOLD CASTING N/A	APPROVALS / DATE — DRAWN B. BOISCLAIR 6/23/02; DESIGN ENG B. BOISCLAIR 10/29/02	BP-2 Z-BRACKET
MATERIAL ASTM-A36 CARBON STEEL	MPS 1002	SIZE A; DWG. NO. PF1267; REV. 0
FINISH ASTM-A153 HOT DIPPED GALVANIZED		SCALE 1:1; CAD FILE: SOLID WORKS; SHEET 1 OF 1
WEIGHT 1.78 LBS	DO NOT SCALE DRAWING	

JAN-10-2003 10:21 HENDRIX WIRE AND CABLE 603 673 1497 P.01/01

©1999 Preformed Line Products. All rights reserved.

PREFORMED LINE PRODUCTS

DEAD-END: COATED

NOMENCLATURE

Crossover Marks: Indicate starting point for application.

Gritted and Neoprene Dipped Legs: Grit is permanently embedded in a coating of neoprene.

Color Code and Length: Assist in identification of conductor size, corresponding to tabular information appearing on catalog pages.

Identification Tape: Shows catalog number and range of outside diameters.

GENERAL RECOMMENDATIONS

Dead-end: Coated, manufactured of aluminum alloy wire, is designed for direct application over conductors jacketed with neoprene, polyethylene, vinyl, or rubber. The sub-setted rods in each leg, bonded together with neoprene, exert a low radial pressure without damaging the jacket. Becasue it is not necessary to skin the plastic covering, the same dead-end can be used for either aluminum-base or copper-base conductors.

Coated dead-ends should not be used over fabric braided conductor. In this case, the fabric should be skinned and a *Distribution-Grip dead-end* applied.

RATED HOLDING STRENGTH. Holding values of coated dead-ends are dependent on a combination of several factors:

- Conductor size, type, stranding
- Thickness of jacket
- Type of jacket
- Specific density of various polyethylenes

The multiplicity of combinations makes it impractical to publish a table of "Rated Holding Strengths." As a general guide, the following considerations may be adapted for a certain conductor and construction practice.

When tested under static tension (ram speed of two inches per minute), Coated dead-ends will hold the full rated breaking strength of all-aluminum and copper conductors, jacketed with neoprene or medium density polyethylene. Static tension results on ACSR approximates the full strength of the aluminum strands plus 10% of the steel core strength.

When Coated dead-ends are tested under sustained (24 hours) loading generally lower holding strengths are recorded. This is attributed to the cold-flow characteristics and frictional coefficient of various plastics. The graphs appearing on the back of each catalog page are based on long-term sustained load tests and may be considered representative of the cables described.

This data indicates the highest percentage of rated breaking strength is held on medium density polyethylene and vinyl. High density (linear) polyethylene has the lowest percent of RBS.

In addition to the specific densities, the data indicates the percent of RBS will also be reduced by increased jacket thickness.

The test results, expressed in actual pounds of sustained load capacity, make it apparent that values between 500 and 1,000 lbs. should be sufficient to meet field requirements on industrial or commercial service drops and messengered aerial spacer cables. Values exceeding 1,000 lbs. are sufficient for primaries and secondaries in urban distribution.

TAPPING. Coated dead-end allows the plastic jacket to remain intact and the conductor continues through the crossover point of the grip. Connectors are applied to the continued tail, with minimum stripping and exposure to corrosion.

RADIO INTERFERENCE. R.I.V. readings and flashover tests indicate Coated dead-ends, applied over plastic jacketed conductors, have the same satisfactory electrical performance as dead-ends applied over bare conductors. This statement does not apply to fabric covered conductor.

76 - Setentacy seis

©1999 Preformed Line Products. All rights reserved.

PREFORMED LINE PRODUCTS

DEAD-END: COATED

GENERAL RECOMMENDATIONS

ACCEPTABLE FITTINGS								SIZE
PRESSED STEEL	STANDARD THIMBLE CLEVIS	CAST	SPOOL INSULATOR	STRAIN INSULATOR	DROP-FORGED	THIMBLES DIAMETERS	THIMBLES GROOVE WIDTH	CONDUCTOR OUTSIDE DIAMETERS
						Diameters 1 1/8" to 2 3/8"	Groove Width 3/16" Min.	Sizes up to .310" O.D.
						Diameters 1 1/8" to 2 3/8"	Groove Width 3/8" Min.	Sizes up to .374" O.D.
						Diameters 1 1/8" to 2 3/8"	Groove Width 7/16" Min.	Sizes up to .428" O.D.
						Diameters 1 1/8" to 2 3/8"	Groove Width 1/2" Min.	Sizes up to .507" O.D.
				NEMA 54-1 3/8" Groove Width		Diameters 1 1/8" to 2 3/8"	Groove Width 3/4" Min.	Sizes up to .609" O.D.
	3/4" Groove Width	3/4" Groove Width			3/4" Groove Width	Diameters 1 1/8" to 2 3/8"	Groove Width 3/4" Min.	Sizes up to .783" O.D.
		3/4" Groove Width		NEMA 54-2 7/8" Groove Width		Diameters 1 1/8" to 2 3/8"	Groove Width 7/8" Min.	Sizes up to .888" O.D.
1" Groove Width	1" Groove Width			NEMA 54-3 NEMA 54-4 1" Groove Width		Diameters 1 1/8" to 2 3/8"	Groove Width 1" Min.	Sizes up to 1.005" O.D.
1 1/8" Groove Width						Diameters 1 1/8" to 2 3/8"	Groove Width 1 1/8" Min.	Sizes up to 1.138" O.D.
		1 1/8" Groove Width	NEMA 53-1 NEMA 53-2 NEMA 53-3 Diameters 1 1/8" to 2 3/8"			Diameters 1 1/8" to 2 3/8"	Groove Width 1 1/8" Min.	Sizes up to 1.550" O.D.

Loops are designed for use with a variety of thimble-clevises, insulators, and thimbles. The fittings appearing in this table have smoothly contoured diameters and adequate groove widths.

(1) Consult Factory for spool insulators ANSI Class 53-4 and 53-5.

SAFETY CONSIDERATIONS

1. This product is intended for a single (one-time) use and for the specified application, although it may be reapplied twice for re-tensioning within 90 days of initial installation. CAUTION: DO NOT MODIFY OR REUSE THIS PRODUCT AFTER 90 DAYS UNDER ANY CIRCUMSTANCES.

2. This product is intended for use by trained craftspeople only. This product SHOULD NOT BE USED by anyone who is not familiar with and trained in the use of it.

3. When working in the area of energized lines with this product, EXTRA CARE should be taken to prevent accidental electrical contact.

4. For PROPER PERFORMANCE AND PERSONAL SAFETY be sure to select the proper size PREFORMED™ product before application.

5. PREFORMED™ products are precision devices. To insure proper performance, they should be stored in cartons under cover and handled carefully.

©1999 Preformed Line Products. All rights reserved.

PREFORMED LINE PRODUCTS

DEAD-END: COATED

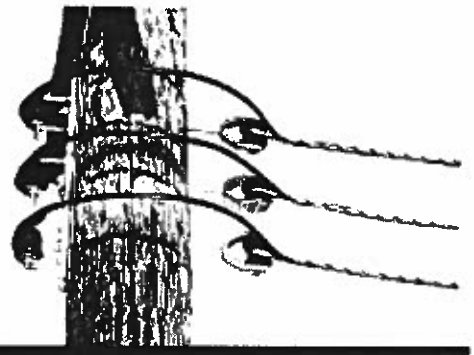

For use on:
Plastic Jacketed Conductors
Polyethylene, Neoprene
Vinyl, Rubber

CATALOG NUMBER	DIAMETER RANGE (INCHES) MIN.	MAX.	NOMINAL CONDUCTOR SIZE AWG or MCM	UNITS PER CARTON	WT./LBS. PER CARTON	LENGTH (INCHES)	COLOR CODE
ND-0500	.243	.253	#6, 7W, 2/64s	100	13	16	Green
ND-0501	.254	.264	#6, Solid, 3/64s #6, 6/1, 2/64s	100	14	17	Red
ND-0502	.265	.272	#4, Solid, 2/64s	100	14	17	Blue
ND-0503	.273	.284	#6, 7W, 3/64s	100	14	18	Orange
ND-0100	.285	.297	#6, 6/1, 3/64s #4, 7W, 2/64s	100	15	19	Black
ND-0101	.298	.310	#4, Solid, 3/64s #6, 7W, 4/64s	100	17	19	Yellow
ND-0102	.311	.323	#4, 7W, 2/64s Al. Alloy #4, 6/1, 2/64s	100	18	20	Blue
ND-0103	.324	.338	#6, 7W, 4/64s, Al. Alloy #4, 7W, 3/64s	100	18	20	Orange
ND-0104	.339	.354	#4, 7W, 3/64s, Al. Alloy #4, 6/1, 3/64s	100	20	21	Black
ND-0105	.355	.374	#4, 7W, 4/64s	100	20	22	Yellow
ND-0106	.375	.397	#4, 7W, 4/64s #4, 7W, 5/64s	100	25	23	Red
ND-0107	.398	.420	#2, 6/1, 3/64s #2, 7/1, 3/64s	100	26	24	Green
ND-0108	.421	.445	#2, 7W, 4/64s, Al. Alloy #1, 7W, 3/64s	50	20	27	Black
ND-0109	.446	.475	#1, 7W, 4/64s #4, 7W, 8/64s	50	22	28	Orange

Conductor may be right-hand lay or left-hand lay.

EXPLANATORY NOTES:

(1) Nominal conductor size indicates one of various combinations of conductor sizes and jacket thickness within each range. To obtain outside diameters of cables not shown, but which fall within the diameter ranges listed, consult conductor chart in the General Information Section.
(2) Holding strength values for representative sizes appear on the reverse side of this page.

©1999 Preformed Line Products. All rights reserved.

PREFORMED LINE PRODUCTS

DEAD-END: COATED

CATALOG NUMBER	SIZE	JACKETING	OUTSIDE DIAMETER (INCHES)	SUSTAINED LOAD TEST RESULTS (LBS.)	PERCENT OF BREAKING STRENGTH
ND-0500	#6, 7W, 2/64s	Poly.*	.246	450	89%
ND-0100	#4, 7W, 2/64s	Poly.*	.294	750	95%
ND-0102	#4, 6/1, 2/64s	Poly.*	.313	800	46%
	#4, 7/1, 2/64s	Poly. (.929)	.320	850	39%
ND-0103	#4, 7W, 3/64s	Neoprene	.326	800	108%
ND-0104	#4, 6/1, 3/64s	Neoprene	.344	750	43%
ND-0106	#2, 7W, 3/64s	Neoprene	.386	600	52%
	#2, 7W, 3/64s	Poly.*	.386	750	62%
ND-0107	#2, 6/1, 3/64s	Poly.*	.410	900	34%
	#2, 6/1, 3/64s	Neoprene	.410	900	34%
	#2, 7/1, 3/64s	Poly.*	.419	1,200	35%
	#2, 7/1, 3/64s	Neoprene	.419	1,000	30%

** Low density or medium density polyethylene per ASTM D-1243-58T.*

This table is based on actual results of long term sustained load tests and may be considered representative of the cables described. Refer earlier in this section for an explanation of the multiple factors affecting holding strength of Dead-end: Coated.

©1999 Preformed Line Products. All rights reserved.

PREFORMED LINE PRODUCTS

DEAD-END: COATED

For use on:
Plastic Jacketed Conductors
Polyethylene, Neoprene
Vinyl, Rubber

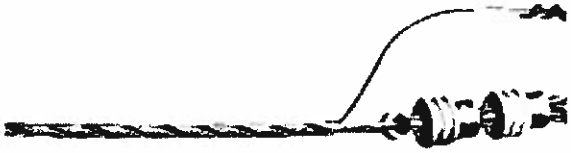

CATALOG NUMBER	DIAMETER RANGE (INCHES) MIN.	MAX.	NOMINAL CONDUCTOR SIZE	UNITS PER CARTON	WT./LBS. PER CARTON	LENGTH (INCHES)	COLOR CODE
ND-0110	.476	.507	#1, 19W, 5/64s 1/0, 7W, 4/64s	50	30	30	Blue
ND-0111	.508	.536	1/0, 19W, 6/64s 1/0, 19W, 5/64s	50	29	30	Red
ND-0112	.537	.571	2/0, 7W, 4/64s 2/0, 19W, 6/64s, Comp.	50	34	31	Black
ND-0113	.572	.608	3/0, 19W, 4/64s 2/0, 19W, 5/64s	50	36	33	Yellow
ND-0114	.609	.648	1/0, 7W, 8/64s 4/0, 7W, 4/64s	25	24	33	Red
ND-0115	.649	.690	1/0, 7W, 10/64s 4/0, 19W, 4/64s	25	26	34	Green
ND-0116	.691	.735	250, 19W, 4/64s 266.8, 18/1, 4/64s	25	30	35	Black
ND-0117	.736	.783	3/0, 7W, 10/64s	25	32	36	Orange
ND-0118	.784	.834	300, 19W, 5/64s 336.4, 19W, 5/64s	25	34	38	Blue
ND-0119	.835	.888	350, 19W, 5/64s 300, 19W, 10/64s Comp.	25	40	40	Black
ND-0120	.889	.945	250, 19W, 10/64s 300, 19W, 10/64s	25	44	42	Yellow
ND-0121	.946	1.005	450, 37W, 6/64s 500, 37W, 6/64s	25	52	44	Green
ND-0122	1.006	1.070	450, 37W, 8/64s 336.4, 19W, 12/64s	10	24	45	Red
ND-0123	1.071	1.138	350, 19W, 12/64s 500, 37W, 10/64s	10	24	47	Blue
ND-0124	1.139	1.212	636, 37W, 10/64s Comp. 500, 37W, 12/64s	10	30	48	Orange
ND-0125	1.213	1.288	795, 61W, 6/64s 795, 37W, 10/64s Comp.	10	30	49	Black
ND-0126	1.289	1.372	1033.5, 61W, 6/64s	10	32	51	Yellow
ND-0127	1.373	1.458	715, 37W, 14/64s	10	38	53	Green
ND-0128	1.459	1.550	795, 37W, 14/64s	10	40	56	Red

Right-hand or left-hand lay standard

EXPLANATORY NOTES:

(1) Nominal conductor size indicates one of various combinations of conductor sizes and jacket thickness within each range. To obtain outside diameters of cables not shown, but which fall within the diameter ranges listed, consult conductor chart in the General Information Section.
(2) Cabled loop design furnished for all sizes on this page. See reference chart in this section for acceptable fittings.
(3) Holding strength values for representative sizes appear on the reverse side of this page.